Guidelines for the Engineer & Designer

FRP Grating, Guardrail, Handrail, Ladders & Structural Shapes

ZEALLGRATE FRP GRATING MASTER

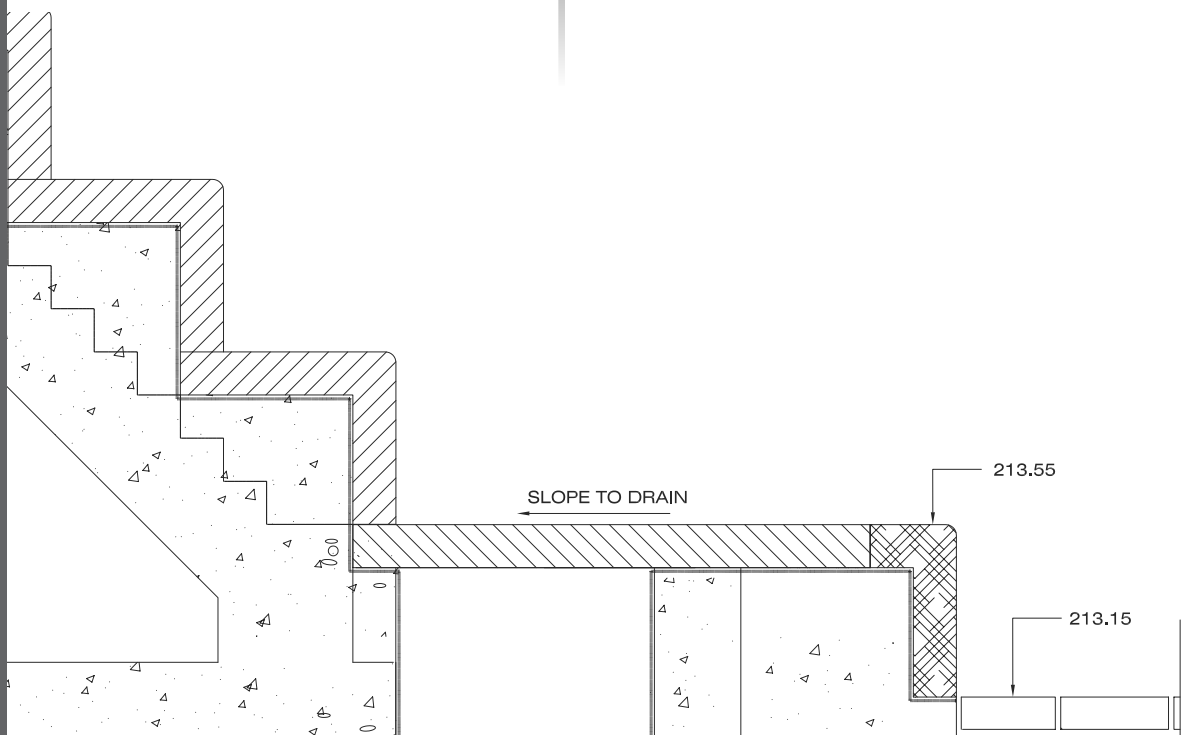

1.0 GENERAL

1.1 The purpose of this guideline is to assist the engineer/designer in designing FRP (Fiberglass Reinforced Plastic) pedestrian walkways utilizing molded and pultruded gratings, railing systems, ladder systems, and structural members. The guideline includes recommended sizes and configurations, recommended design criteria, and referenced standards, where applicable.

1.2 Drawing details of the FRP systems described in this guideline are also available at ZeAllgrate

2.0 FRP GRATINGS AS PEDESTRIAN WALKWAYS

2.1 Gratings

2.1.

or pultrusion processes. Molded gratıngs are available in a variety of stock panel sizes (i.e. 3' x 10', 4' x 8', 5' x 10', and 4' x 12' for 1-1/2" deep, 1-1/2" square mesh gratings). The designer should consider these sizes at the early stages of structure layout to efficiently utilize the material and minimize installation costs.

Molded gratings are available in a variety of resin systems and colors to meet specific project requirements. Detailed descriptions of the resin systems available are included

Pultruded gratings are available in two resin systems and two colors. Detailed descriptions of these are given in the ZeAllgrate *brochure*.

2.2 Minimum Grating Design Criteria

Pedestrian Loads*	
Uniform Live Load	50 lb/ft^2 - 65 lb/ft^2
Concentrated Load	250 lb
Dead Load	3.75 lb/ft^2
Maximum Deflection	Span L/120 or 3/8" (whichever is less)

*Note that these design criteria are minimums, but exceed general building code requirements for office space. Other criteria are commonly used in specifications. For pedestrian walkways in industrial applications, the above are sufficient and are recommended to prevent excessive cost.

2.3 Application Notes: Molded FRP Gratings

2.3.1 Molded grating spans should be kept to 36" or 48" from center to center of supporting members to most efficiently utilize grating panels. Typically, 1" deep molded gratings have acceptable deflections at spans up to 3'-0". 1-1/2" deep molded gratings are acceptable for spans from 3'-0" to 3'-6", and 2" deep molded gratings are acceptable for spans from 4'-0" to 4'-6".

2.3.2 Grating panels installed over multiple spans will further reduce deflections. The deflection of the grating can be determined using standard AISC beam formulas and

2.3.3 Molded gratings may be cantilevered as required to a maximum distance of 6" (for 1" deep gratings) and up to 12" (for 1-1/2" and 2" deep gratings) from the centerline of the last supporting member. Gratings used in this way must be held down to a minimum of two supports and have a minimum of three hold downs clips at each interior support to prevent overturning of the grating panel.

2.3.4 Hold Down Clips: Gratings shall be firmly fastened to their supports using a minimum of two "M" style hold down clips at a maximum spacing of 4'-0" on center per support beam with a minimum of four hold down clips per grating panel. Gratings installed in shallow, narrow trenches may installed without hold down clips if the grating is adequately restrained to prevent horizontal sliding, vertical lifting, or tipping.

2.3.5 Covered Gratings: Due to the nature of the manufacturing process, covered gratings are often slightly warped. As a result of this, covered gratings may rock and pose a trip

recommends "WLP" type hold down clips for holding down covered gratings.

2.3.6 Abutting edges of molded grating panels should be supported by structural members or fastened together using "F" style clips at a maximum spacing of 24" on center. This will prevent differential deflection when one of the abutting gratings is loaded.

2.3.7 Due to the bi-directional nature of square mesh molded gratings, unsupported holes of limited size may be cut into the edges or interior of the panels without the use of additional supports. This is very useful for applications which involve pipe penetrations. As a rule of thumb, as long as no more than 1/3 of the individual grating panel width is removed by such a hole, no additional support will be required.

2.3.8 Edge Banding: Unlike steel and aluminum gratings it is not necessary to edge band molded gratings for structural reasons. As FRP cannot be welded, edge banding will

personnel may be passing through the grating to prevent injury from stub bars.

2.3.9 Molded Grating Details: The attached drawings (A and B) give details of the "M" style hold down clip and the "F" style abutment clip.

2.4 Application Notes: Pultruded Gratings

2.4.1 As with molded gratings, pultruded gratings may also be used on multiple spans to reduce deflections. AISC beam formulas and grating design procedures apply.

2.4.2 Like molded gratings, edge banding is not required for pultruded gratings. Due to the construction of this type of grating, it is very difficult to install banding.

2.4.3 Pultruded Grating Details: The attached drawings (G and H) give details of the “M” and “FC” style hold down clip. Gratings must be mechanically fastened in place to prevent sliding. Gratings shall be firmly fastened to their supports using a minimum of two style hold down clips at a maximum spacing of 4’-0” on center per support beam with a minimum of four hold down clips per grating panel. Gratings installed in shallow, narrow trenches may installed without hold down clips if the grating is adequately restrained to prevent horizontal sliding, vertical lifting, or tipping.

3.0

3.1 Railing Arrangement & Dimensions

3.1.

3/16" thick square tube post with two 1-3/4" x 1/8" thick square tube rails. The mid-rail passes through the post at a routed square hole and is riveted and bonded in place. The top rail is fitted into a u-shaped routed slot in the top of the post and is riveted and bonded in place. The system includes a 4" FRP toe-plate mounted at each post using a self tapping screw. The height of the top rail is 42" above the walking surface.

consists of 1-1/2" x 1/4" wall round tube, connectors and brackets. Recommended handrail installation height is 34" above walking surface or leading edge of stair tread. Railing systems are available in vinyl ester and polyester fire-retardant resin formulations in a safety yellow color.

3.2 Design Criteria

3.2.1 3.2.1The railing systems are designed to meet the loading requirements of OSHA 1910.29 (b) and the International Building Code (IBC), a concentrated load of 200 lb downward or outward at any point on the rail or a uniform load of 50 lb/ft applied in any direction on the top rail. Loads are assumed not to act concurrently.

3.3 UV Protective Coatings

3.3.1 For applications where the railing system is to be used outdoors, a polyurethane based UV protective coating is recommended to preserve the long-term appearance of the railings.

3.4 Layout Guidelines

3.4.1 The following guidelines should be used in railing layout to most economically utilize this system and to maximize performance.

3.4.2 Post and offset handrail supports spacing: Post and offset handrail supports spacing must not exceed 6'-0" to meet OSHA and IBC loading requirements.

3.4.3 Inside or Outside Corners: Posts cannot be placed at corners. At interior or exterior corners, two posts should be placed within 12" of the corner, on both sides.

3.4.4 Post Location with Respect to Structure: For side-mounted posts attaching to fiberglass structures, the post should be placed as close as practical but no more than 6" to an element which torsionally fixes the element to which the post is attached. This will prevent excessive rotation of the structural element when the posts are under load.

3.4.5 Number of Posts Per Section: A minimum of two posts per straight guardrail section are recommended to improve durability in shipping and erection.

3.5 Guardrail and Handrail System Details

3.5.1 Refer to the attached drawings for railing assembly details, splicing, and post base mountings.

4.0

4.1 Ladder Arrangement & Dimensions

4.1.

configuration requirements of OSHA 1910.23 and consists of 1-3/4" x 1/4" thick square tube rails and 1-1/4" diameter x 1/4" thick fluted rungs. There is a clear horizontal distance of 18" between the inside of the rails and a center to center distance between rungs of 12". Ladders are available in vinyl ester and polyester fire-retardant

Fiberglass Guardrail, Handrail & Safety Ladders brochure for further description of this system.

4.2 Loading Requirements

4.2.1 This ladder system is designed to meet the loading requirements of ANSI 14.3, "American National Standard for Ladders -Fixed – Safety Requirements". The ladder rungs are designed to meet the ANSI minimum live load requirement of a 250 lb concentrated load at the mid-point of the rung. The installed ladder is designed to support two 250 lb concentrated loads located between any two consecutive attachments.

4.3 Support Requirements

4.3.1 Ladders will require support back to a wall or solid structure at intervals not to exceed 6'-0". Exceeding this spacing will result in a ladder installation that is too flexible for comfort or safety. Ladders are required to be base supported to structure or back to a wall or solid structure. All ladders are to include a minimum of one base support. The standard ladder wall mount bracket is not capable of supporting a vertical load. Ladders that cannot be base supported should include one pair of bottom wall brackets engineered to support design loads.

4.4 Fall Protection System Requirements

4.4.1 The designer is referred to OSHA 1910.28 (b) (9), for ladders extending 24 feet or more above a lower level. Beginning on November 18, 2018, all new ladders greater than 24 feet in height be equipped with a personal fall arrest system or a ladder safety system. Per OSHA 1929.29 (i), ladder safety systems and their supports must be capable of withstanding, without failure, a drop test consisting of an 18-inch (41-cm) drop of a

verify that they meet these requirements.

4.4.2 The designer is referred to OSHA 1910.28 and 1910.29 for any additional requirements related to ladder configuration.

4.5 Ladder System Details

4.5.1 Refer to the attached drawings for ladder system splicing, and mounting details.

5.0

5.1 Availability

5.1.1

angle, channel, square and round tubes, I-sections and W-sections. These are available in fire retardant vinyl ester (beige), fire retardant polyester (dark gray) and non-fire retardant polyester (green).

5.2 Design Criteria

5.2.1 The following design criteria is recommended for use in FRP structural members used as beams for supporting live loads plus the dead load of the FRP structure. Higher safety factors and deflection ratios may be needed for other conditions.

FRP Structural Shapes*	
Maximum Deflection	L/180
Allowable Bending Stress	*10,000 psi (F.S. = 3)
Allowable Shear Stress	1,500 psi (F.S. = 3)
Allowable Bearing Stress	10,000 psi (F.S. = 3)

**Assumes adequate lateral bracing of compression flange, see 5.6 and a b/t ≤ 12 (flange width-to-flange thickness*

5.3 Preferred Sizes

5.3.1 The table below gives a list of preferred sizes for FRP structural members. These sizes are available from stock without the added cost and delay of a mill run. Members are stocked in 20'-0" lengths.

FRP Structural Shapes	
Shape Name	**Shape Size**
Equal Leg Angles	3" x 1/4", 3" x 3/8", 4" x 1/4", 4" x 3/8", 4" x 1/2"
Channels	6" x 1-5/8" x 1/4", 8" x 2-3/16" x 3/8", 10" x 2-3/4" x 1/2"
I - Sections	8" x 4" x 3/8", 12" x 6" x 1/2"
Wide Flange Sections	4" x 4" x 1/4", 6" x 6" x 1/4", 6" x 6" x 3/8", 8" x 8" x 3/8"

5.4 Beam and Column Selection Tables

5.4.1 The ZeAllgrate provides tables for selecting the common sizes of FRP structural members used as columns and beams. Note that these tables are based on adequate lateral support of the compression flange of bending members (see Section 5.6, Lateral Support Requirements). The Design Guide also provides information on corrosion resistance, section dimensions and properties, mechanical and physical properties, and thermal effects.

5.5 Availability of Other Shapes and Mill Run Quantities

5.5.1 Non-stock shapes can be obtained in mill run quantities. Consult Customer Service for availability. These members may be used economically if they are ordered in these quantities.

5.6 Lateral Support Requirements

5.6.1 The table below gives the maximum lateral support spacing required to produce the full bending capacity of these members.

Lateral Support Requirements - FRP Structural Shapes			
Member	**Lateral Support Spacing**	**Member**	**Lateral Support Spacing**
C6" x 1/4"	48"	W4" x 1/4"	60"
C8" x 3/8"	60"	W6" x 1/4"	84"
C10" x 1/2"	60"	W6" x 3/8"	96"
I4" x 1/4"	24"	W8" x 3/8"	108"
I6" x 1/4"	36"	W10" x 3/8"	156"
I8" x 3/8"	48"	W12" x 1/2"	168"
I10" x 3/8"	60"		
I12" x 1/2"	84"		

5.7 Connection Details

5.7.1 The attached drawings include example connection details for use with fiberglass structural shapes used as beams and columns. Note that these details are examples

standard connection details designed to exceed the ultimate capacity of all standard FRP beams available.

5.72 The following tables outline allowables and requirements that should be considered when designing and detailing connections.

STRUCTURAL CONNECTIONS

BEARING ON FRP **Bolt Allowable for Given FRP Plate Thickness (1)**

Material Thickness	Bolt Diameter				
	3/8"	1/2"	5/8"	3/4"	1"
1/8"	469	625	781	938	1250
1/4"	938	1250	1563	1875	2500
3/8"	1406	1875	2344	2813	3750
1/2"	1875	2500	3125	3750	5000
3/4"	2813	3750	4688	5625	7500
1"	3750	5000	6250	7500	10000

(1) BEARING on FRP plate or web controls (Factor of Safety = 3.0; Fp=10,000 psi)
The designer must confirm that no other component of connection controls.

BOLT SHEAR **Bolt Allowable for Given Bolt Diameter (2)**

Bolt Type & Application	Bolt Diameter				
	3/8"	1/2"	5/8"	3/4"	1"
316SS - Single Shear (3)	1408	2503	3912	5633	10014
316SS - Double Shear	2816	5007	7823	11265	20027
FRP Threaded Rod (4) Single Shear	300	600	900	1000	2050
FRP Threaded Rod Double Shear	600	1200	1800	2000	4100

(2) The designer must confirm that no other component of connection controls.
*(3) SHEAR of bolt controls. Fv = 0.17*FU = 0.17*75,000 psi = 12,750 psi*
(4) SHEAR of FRP threaded rod controls (Factor of Safety = 4.0).

RATIO OF EDGE DISTANCE TO FASTENER DIAMETER *(* - "cl" is centerline)*

	RANGE	RECOMMENDED
Edge Distance - cl* bolt to END	2.0-4.0	3.0
Edge Distance - cl* bolt to SIDE	1.5-3.5	2.5
Bolt Pitch - cl* to cl*	4.0-5.0	5.0

6.0 FRP STAIR SYSTEMS

6.1 Stair System Components

6.1.1 FRP structural shapes and special FRP gratings can be used in combination to create FRP stairs. The stair treads are typically made using 1-1/2" deep, 1-1/2" x 6" mesh

stair treads are available in the same resin systems and colors as molded grating.

wide x 144" long panel with solid nosing along the 120" and 144" sides. These panels can be best utilized if stair tread widths are kept to 24", 30", 36" or 42" with depths of

product line. These are manufactured using standard pultruded gratings with a stiffened nosing. The nosing bars are painted a contrasting color.

6.2 Design Criteria

6.2.1 The designer is referred to OSHA 1910.25, "Stairways" for guidelines in the design of stair systems in general. The stair should be designed for a moving live load of 1,000 lb (500 lb/stair stringer).

6.3 Tread Deflections

6.3.1 Tread deflections are typically limited to L/150 or less. The table below gives the

of stair treads

42" will require a stiffened nosing or intermediate support to reduce deflections. The deflections are based on 250 lb and 500 lb point loads applied over a 4" wide x 6" deep load plate starting at the nosing edge to simulate the landing of a foot.

Load (LB)	Span (IN)				
	18	24	30	36	42
250	0.03"	0.05"	0.09"	0.16"	0.25"
500	0.06"	0.10"	0.19"	0.32"	0.50"

*Load deflection tables for pultruded stair treads are available in the ZeAllgrate *Fiberglass Pultruded Grating* brochure.

6.4 FRP Stair Design Notes

6.4.1 Most stairs can be satisfactorily designed using up to 8" or 10" channels as stringers with the flanges outward. The stringer must be designed to meet the loading requirements given in section 6.3.1. The individual stair treads are supported by 2" x 2" x 1/4" angles bolted to the stringers with two 3/8" diameter bolts.

6.4.2 The stair guardrails are manufactured using a system identical to the one described in section 3.0 for FRP Guardrails and Handrails. The designer is referred to OSHA 1910.29 (f) "Handrails and Stair Rail Systems" for detailed configuration requirements. The guardrail should consist of a full 42" tall two rail guardrail with a separate handrail located at 30" – 38" above the line of tread nosings.

6.4.3 Long stair runs may require intermediate support using columns and may require bracing to prevent excessive side sway. (See Charts)

Stringer Design Table - OSHA Design Criteria

Notes: 1. Slope range is 30 to 50 degrees.
2. OSHA does not limit the maximum rise.
3. Design is for a 1000 lb stair load, 500 lb point load/ stringer L/D ≥180.
4. C8 = C 8" x 2-3/16" x 3/8"; C10 = C 10" x 2-3/4" x 1/2".

Vertical Rise in Feet	Horizontal Run in Feet																				
	1	2	3	4	5	6	7	8	9	10	11	12	13	14	15	16	17	18	19	20	21
1	C8																				
2		C8	C8																		
3			C8	C8	C8																
4				C8	C8	C8															
5					C8	C8	C8	C8													
6						C8	C8	C8	C8	C8				**Stringers below double lines require lateral bracing. See detail.**							
7						C8	C8	C8	C8	C8	C8	C8									
8							C8	C8	C8	C8	C8	C8	C8								
9								C8	C8	C8	C8	C8	C8	C8	C8						
10									C8	C8	C8	C8	C8	C8	C8	C8					
11										C8	C8	C8	C8	C8	C8	C10	C10	C10	C10		
12											C8	C8	C8	C8	C8	C10	C10	C10	C10	C10	
13											C8	C8	C8	C8	C10	C10	C10	C10	C10	C10	C10
14												C8	C8	C10	C10	C10	C10	C10	C10	C10	C10
15													C10	C10	C10	C10	C10	C10	C10	C10	C10
16						**Stringers below heavy black lines are longer than 20'-0". These require a splice or pull to length.**								C10	C10	C10	C10	C10	C10	C10	C10	C10
17															C10	C10	C10	C10	C10	C10	C10
18																C10	C10	C10	C10	C10	C10

Stringer Design Table - IBC Design Criteria (3'-0" Wide Stair Only)

Notes: 1. Slope range is 20 to 32.5 degrees.
2. Landings are required every 12' of rise.
3. Design is for a 100 psf uniform load, L/D ≥ 180.
4. C8 = C 8" x 2-3/16" x 3/8"; C10 = C 10" x 2-3/4" x 1/2".

Vertical Rise in Feet	Horizontal Run in Feet																		
	1	2	3	4	5	6	7	8	9	10	11	12	13	14	15	16	17	18	19
1		C8																	
2			C8	C8	C8								Stringers below heavy black lines are longer than 20'-0".						
3					C8	C8	C8	C8											
4							C8	C8	C8	C8	C8								
5								C8	C8	C8	C8	C10	C10						
6										C8	C8	C10	C10	C10	C10	C8*			
7											C10	C10	C10	C10	C10	C8*	C8*	C8*	C8*
8													C10	C10	C10	C8*	C8*	C8*	C8*
9															C8*	C8*	C8*	C8*	C8*
10					Stringers below double lines require lateral bracing. See detail.											C8*	C8*	C8*	C8*
11																		C8*	C8*
12																			C8*

*Indicates that C8 stringers can be used if columns are installed at midspan of stringer. C10 will not work.

Stringer Design Table - IBC Design Criteria (4'-0" Wide Stair Only)

Notes: 1. Slope range is 20 to 32.5 degrees.
2. Landings are required every 12' of rise.
3. Design is for a 100 psf uniform load, L/D ≥ 180.
4. C8 = C 8" x 2-3/16" x 3/8"; C10 = C 10" x 2-3/4" x 1/2".

Vertical Rise in Feet	Horizontal Run in Feet																		
	1	2	3	4	5	6	7	8	9	10	11	12	13	14	15	16	17	18	19
1		C8																	
2			C8	C8	C8								Stringers below heavy black lines are longer than 20'-0".						
3					C8	C8	C8	C8											
4							C8	C8	C8	C8	C10								
5								C8	C8	C8	C10	C10	C10						
6										C10	C10	C10	C10	C10	C8*	C8*			
7											C10	C10	C10	C8*	C8*	C8*	C8*	C8*	C8*
8													C10	C8*	C8*	C8*	C8*	C8*	C8*
9															C8*	C8*	C8*	C8*	C8*
10					Stringers below double lines require lateral bracing. See detail.											C8*	C8*	C8*	C8*
11																		C8*	C8*
12																			C8*

*Indicates that C8 stringers can be used if columns are installed at midspan of stringer. C10 will not work.

6.5 FRP Stair Details

6.5.1 The attached drawings provide typical details of stair systems using channel stringers.

DRAWING A: F CLIP ASSEMBLY

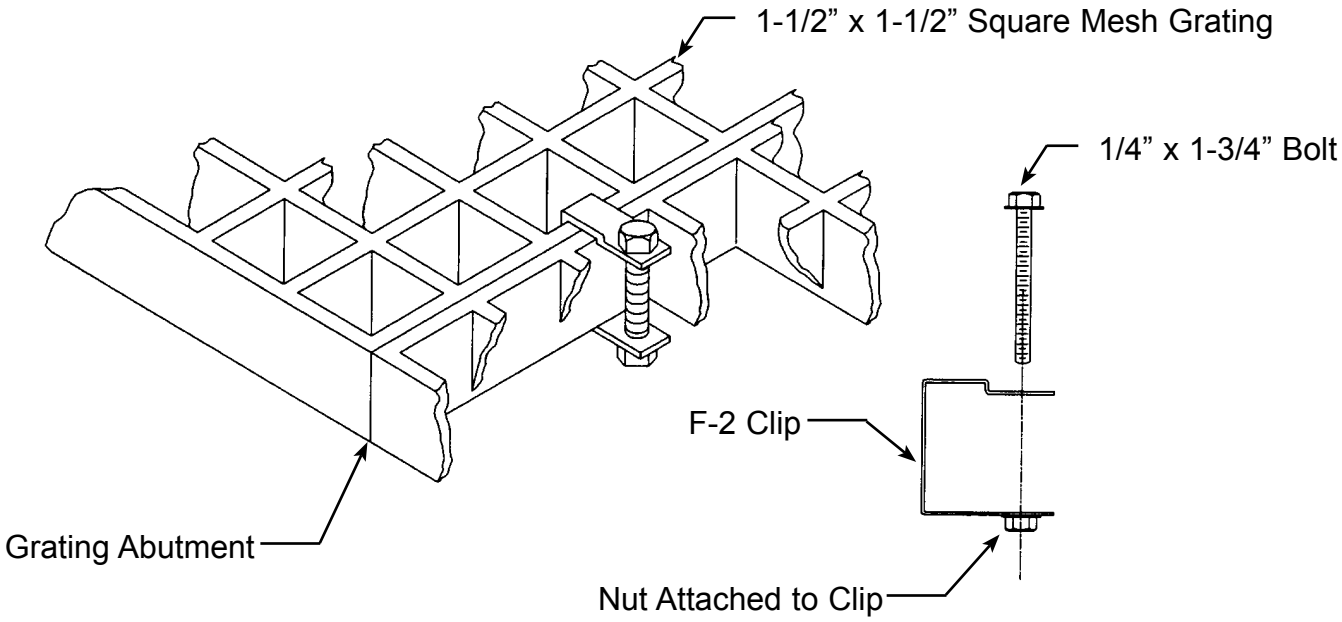

DRAWING B: M CLIP ASSEMBLY

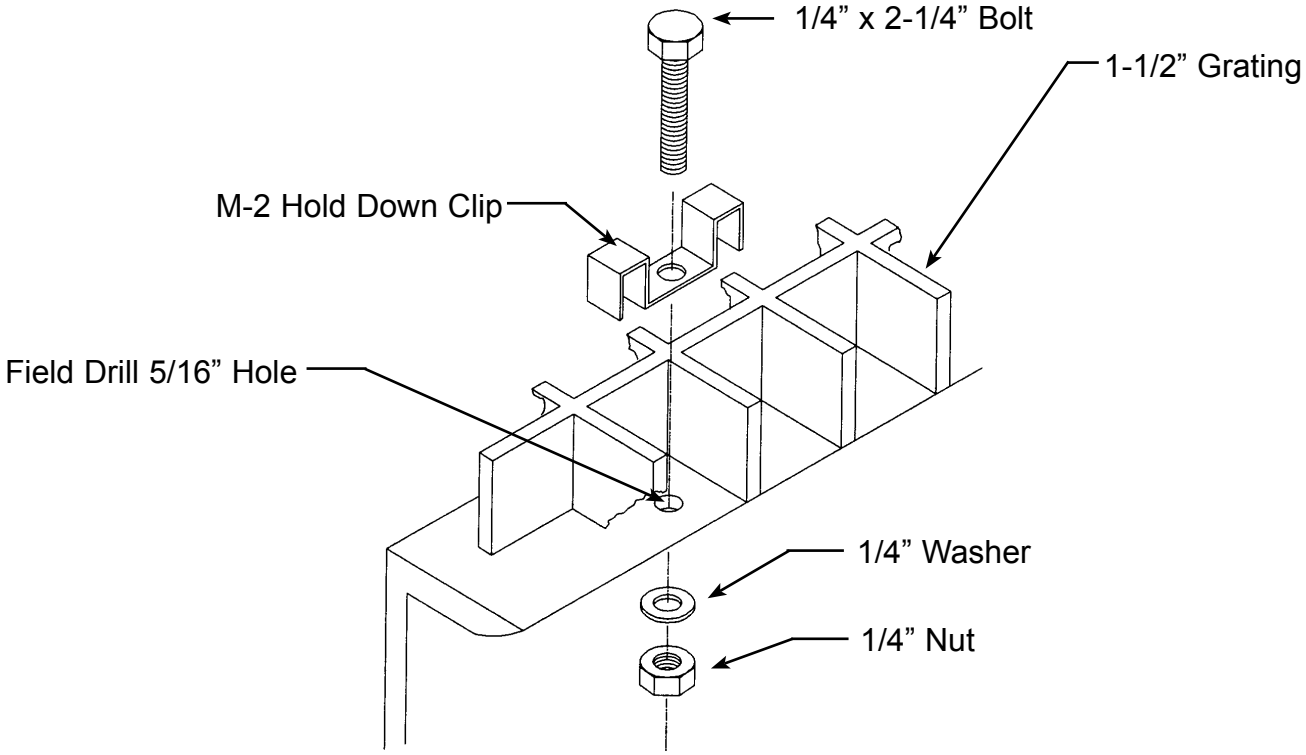

Guidelines for the Engineer & Designer

DRAWING C:
FRP EDGEBANDING
Straight Opening

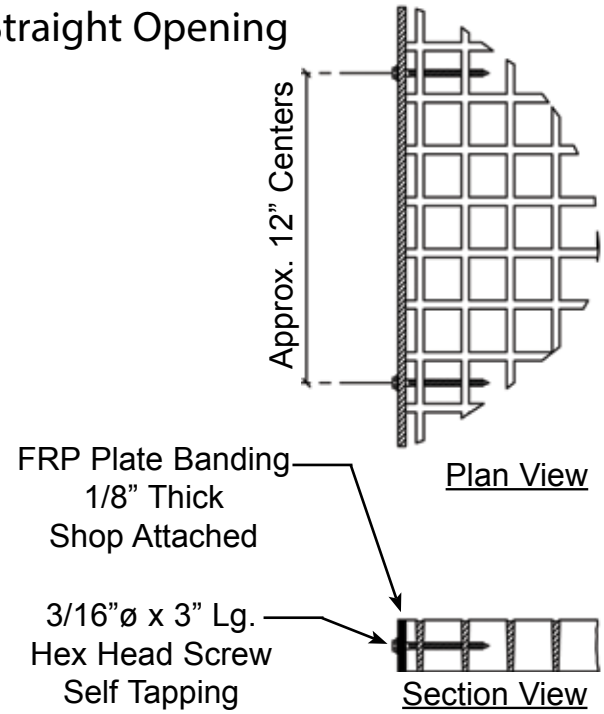

DRAWING D:
FRP EDGEBANDING
Radius Opening

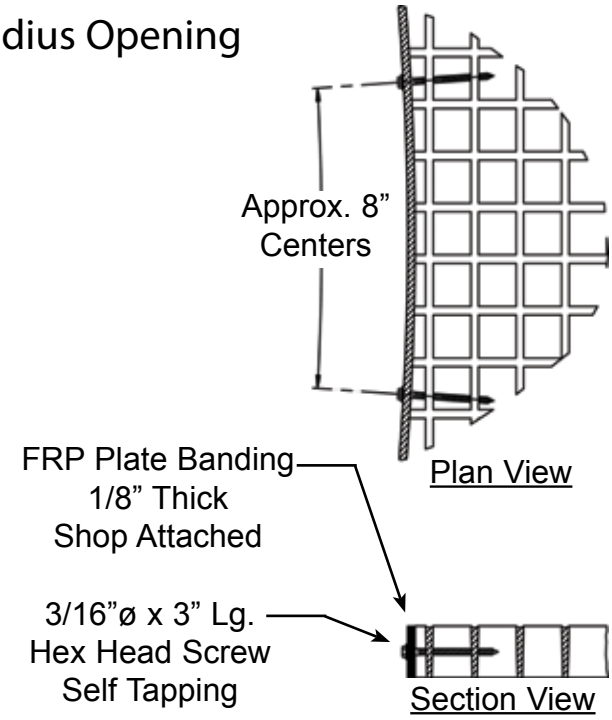

DRAWING E:
FRP KICKPLATE
Straight Opening

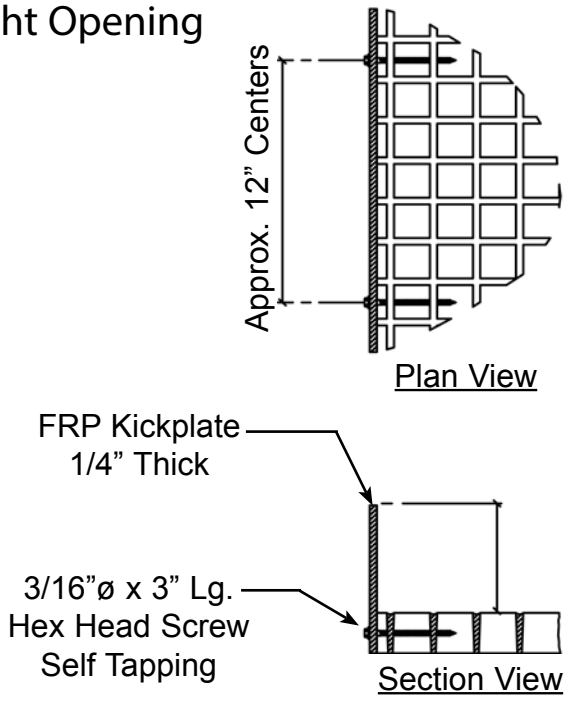

DRAWING F:
FRP KICKPLATE
Radius Opening

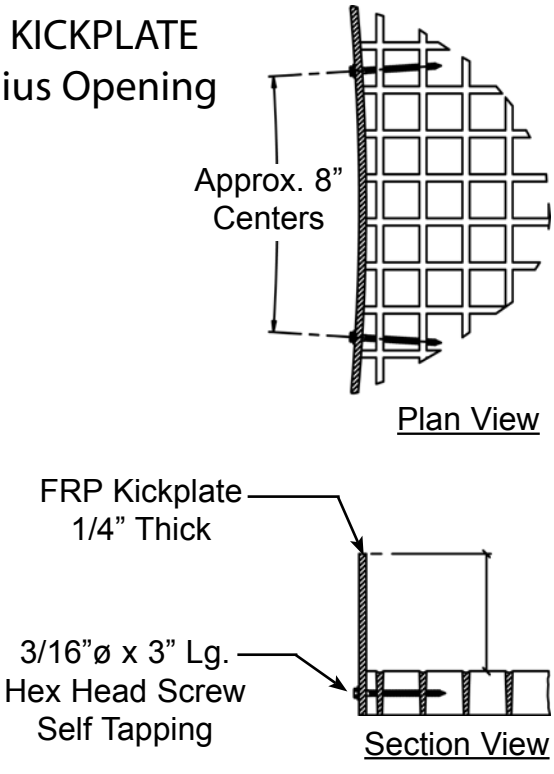

DRAWING G: MI-60 CLIP ASSEMBLY

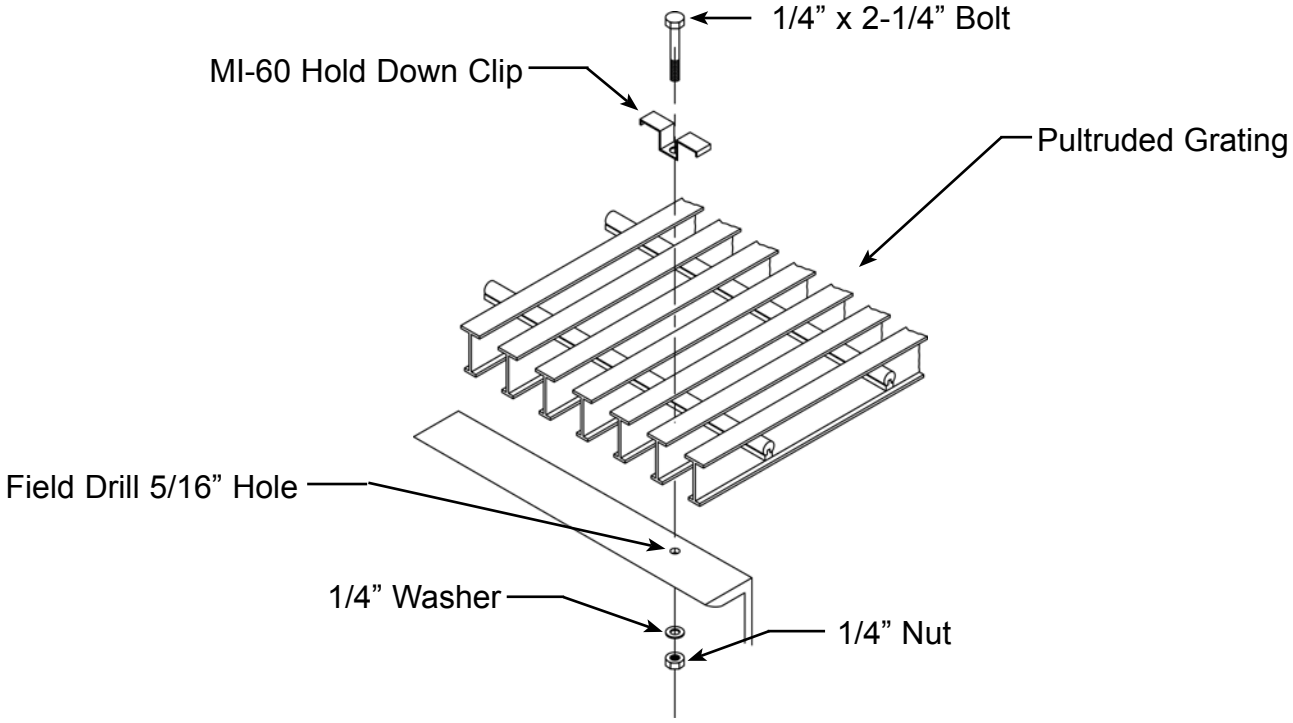

DRAWING H: FC CLIP ASSEMBLY

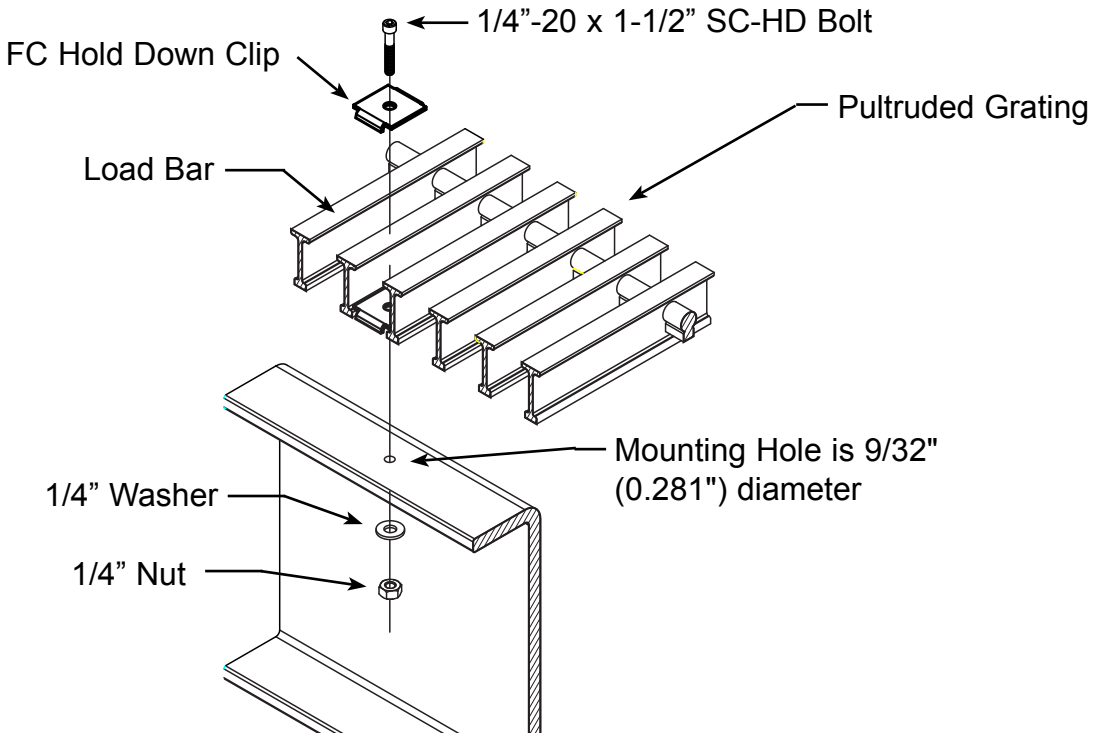

DRAWING I: FRP GUARDRAIL CONNECTIONS

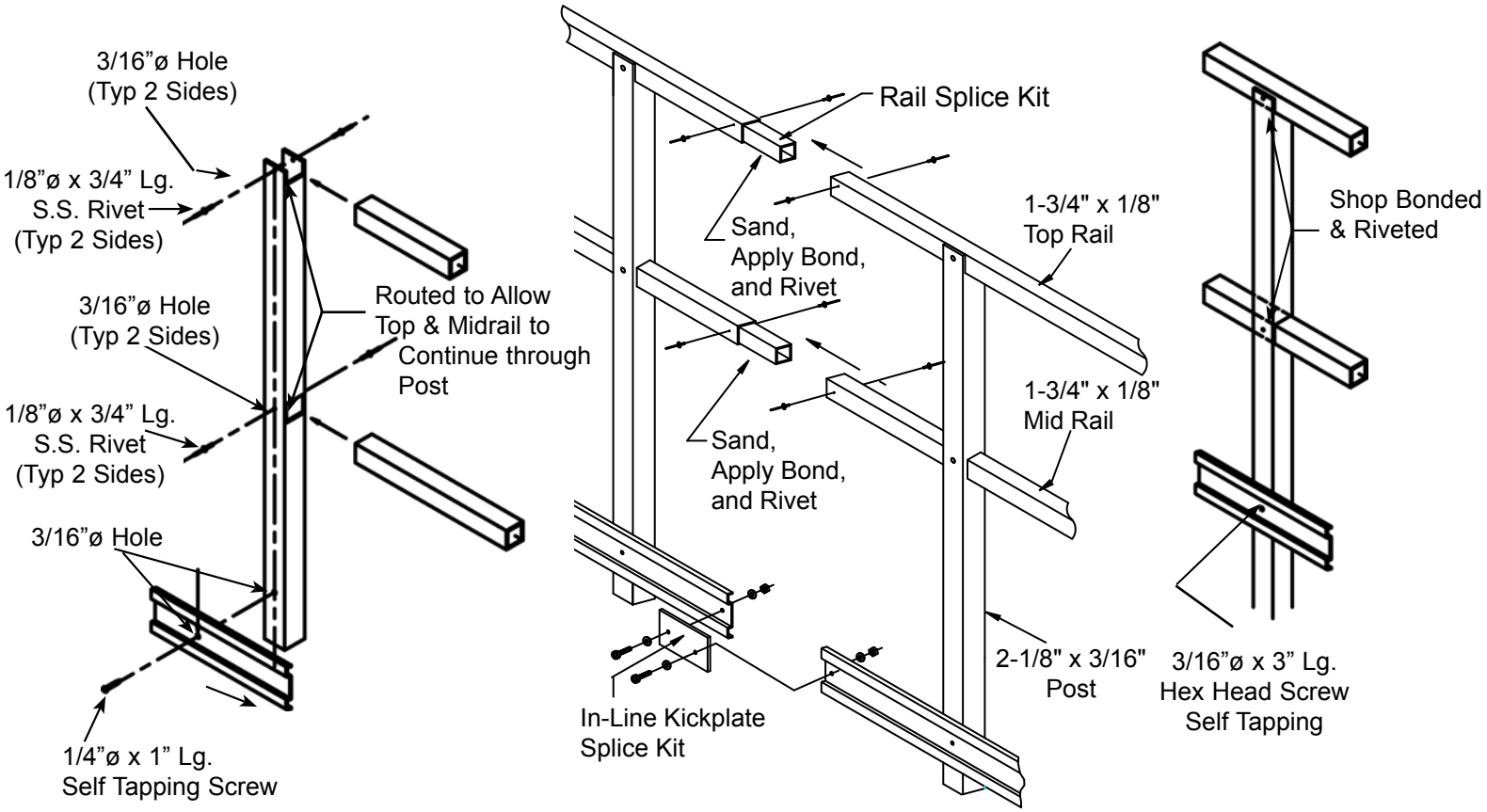

DRAWING J: TOE PLATE SPLICE CONDITIONS

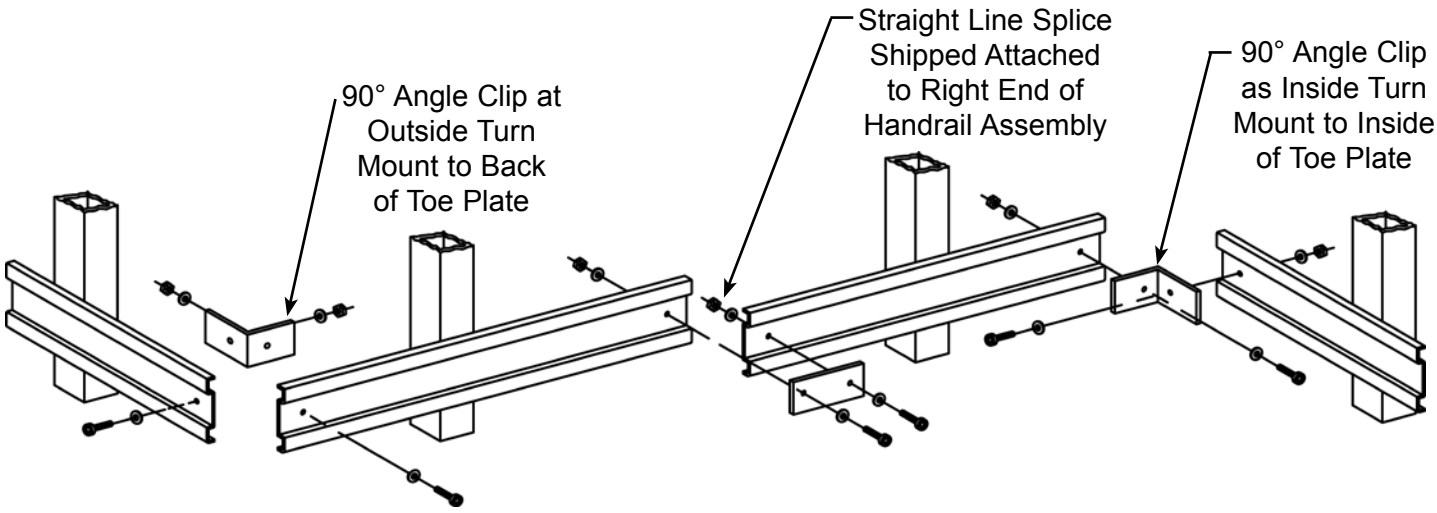

Outside Turn Straight Line Inside Turn

DRAWING K: GUARDRAIL POST TO FRP STRUCTURE CONNECTION

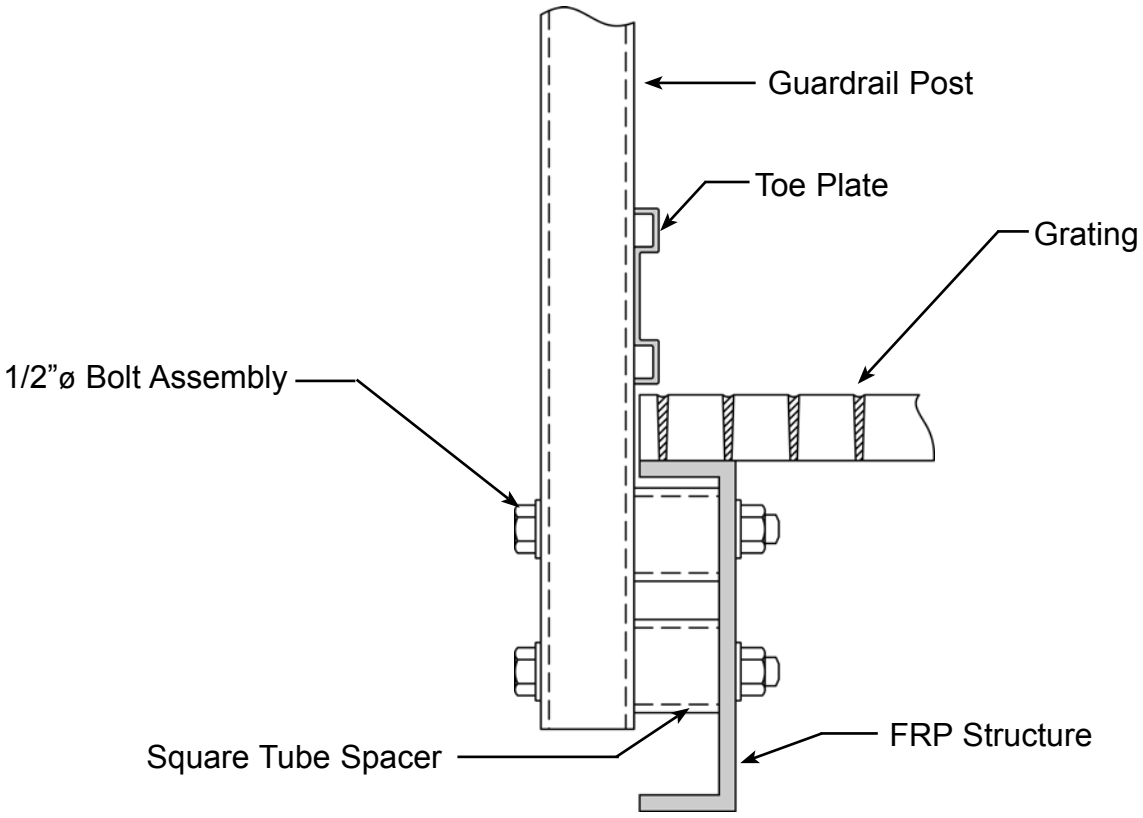

DRAWING L: REMOVEABLE GUARDRAIL CONNECTION

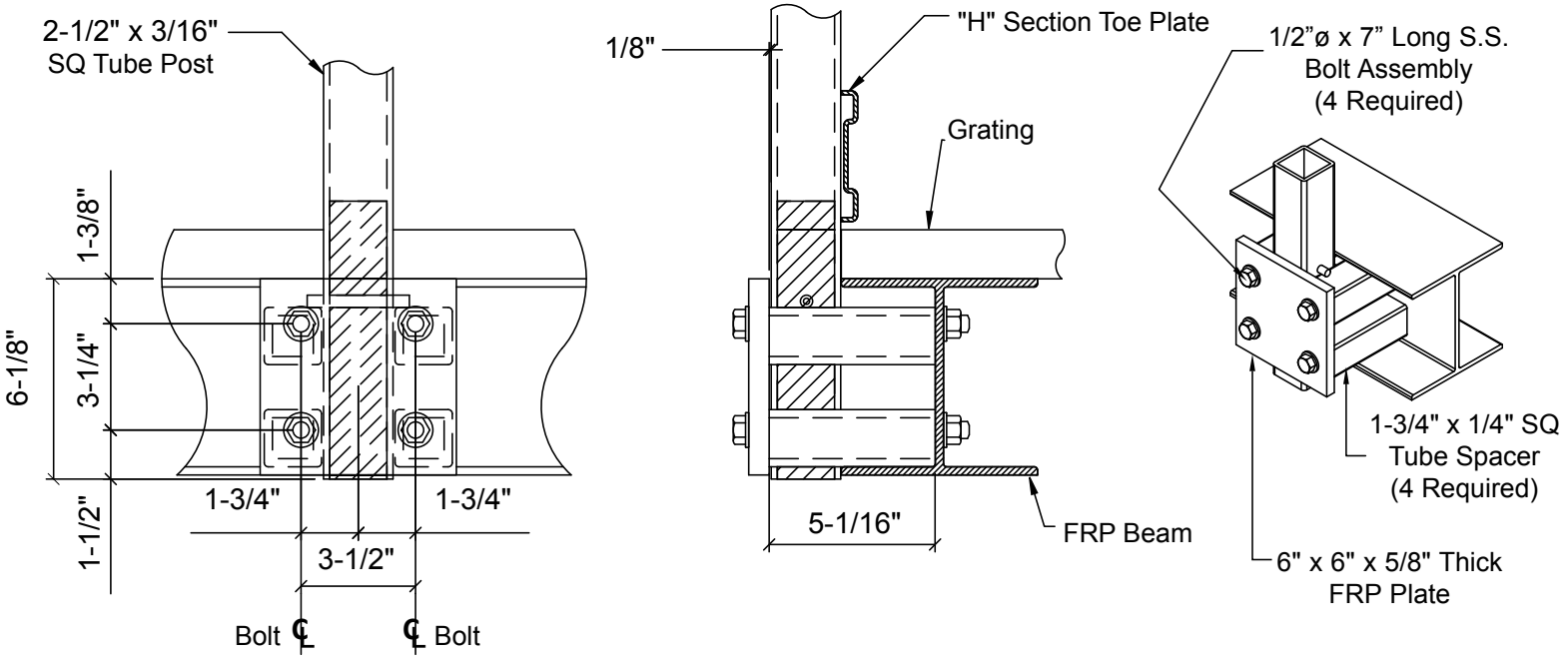

DRAWING M: STANCHION BASE

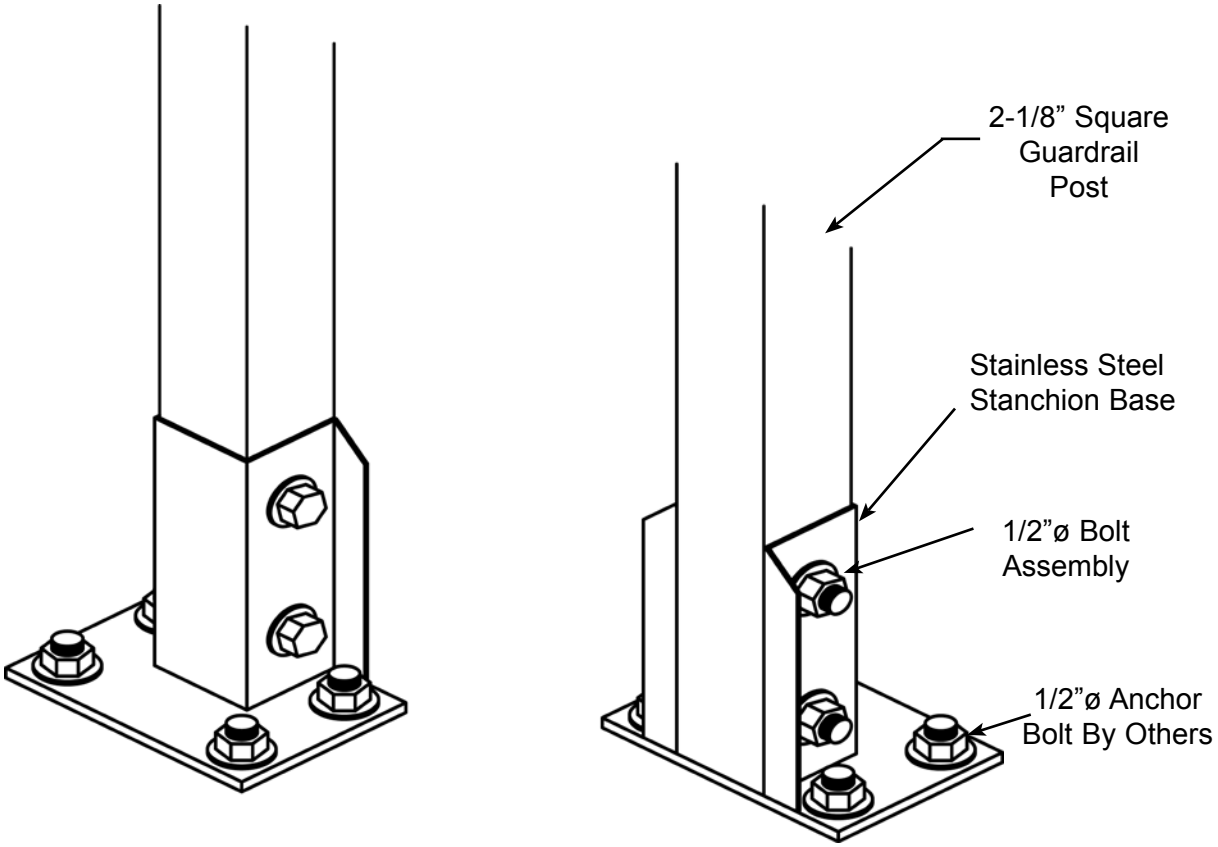

DRAWING N: LADDER FLOOR MOUNT KIT

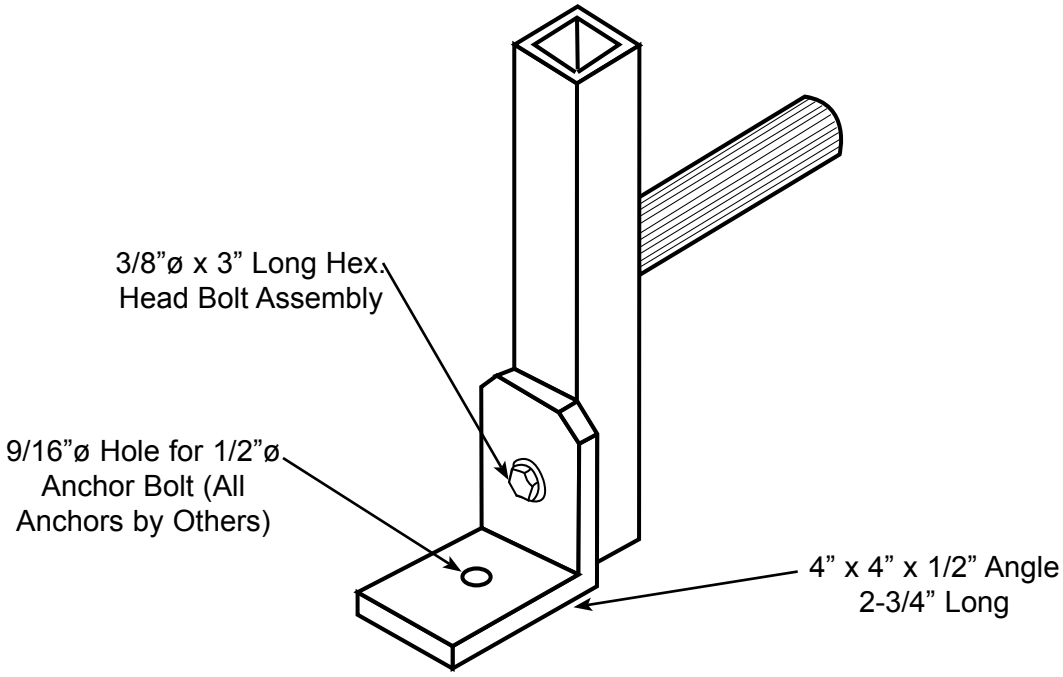

DRAWING O: LADDER WALL MOUNT KIT

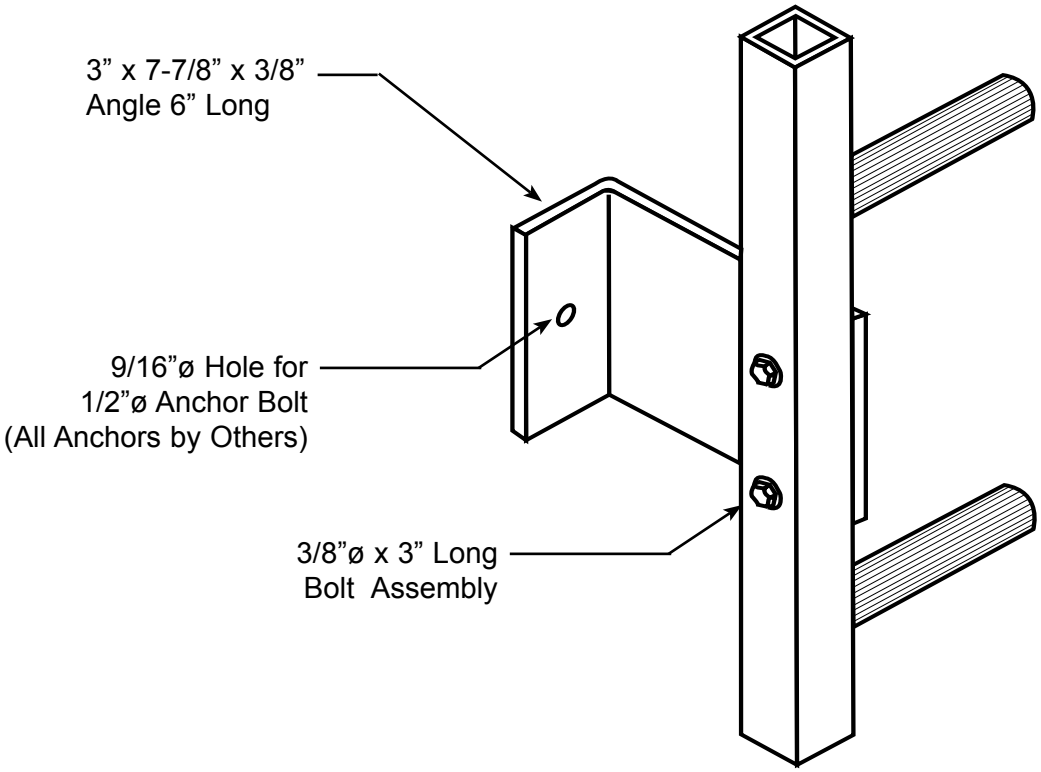

DRAWING P: LADDER SPLICE KIT

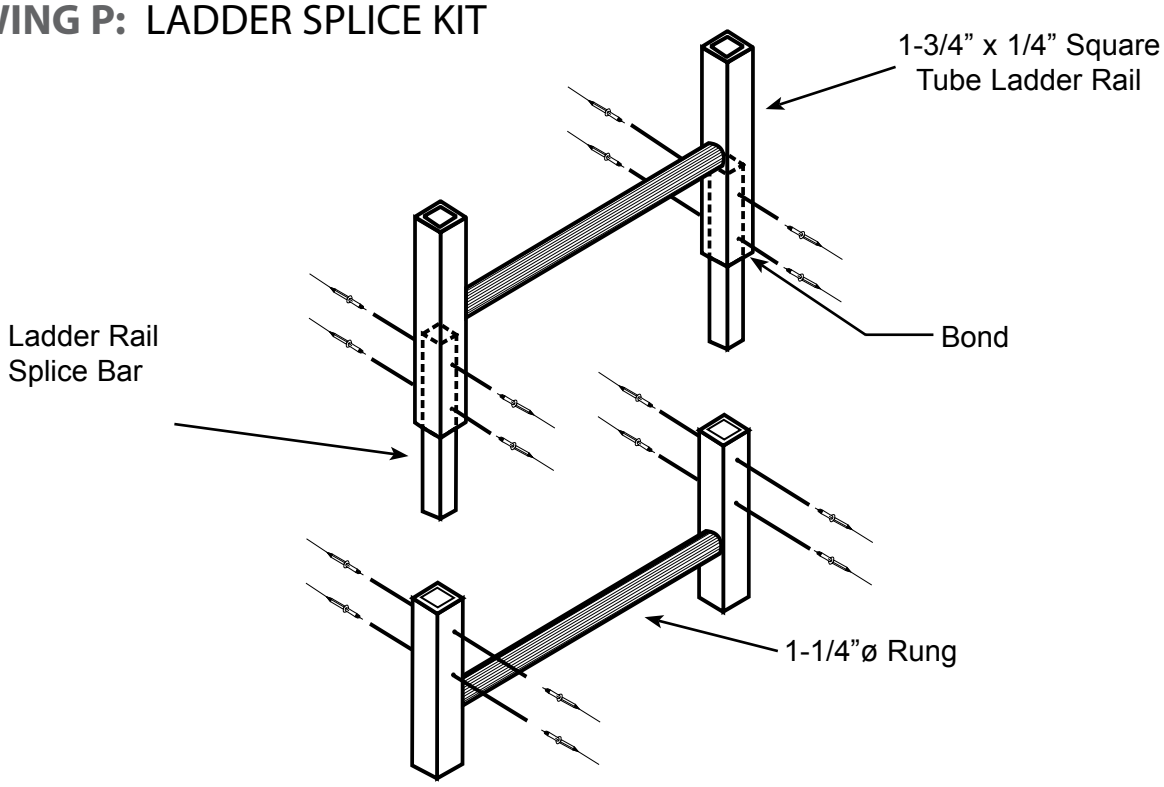

DRAWING Q: WIDE FLANGE COLUMN TOP

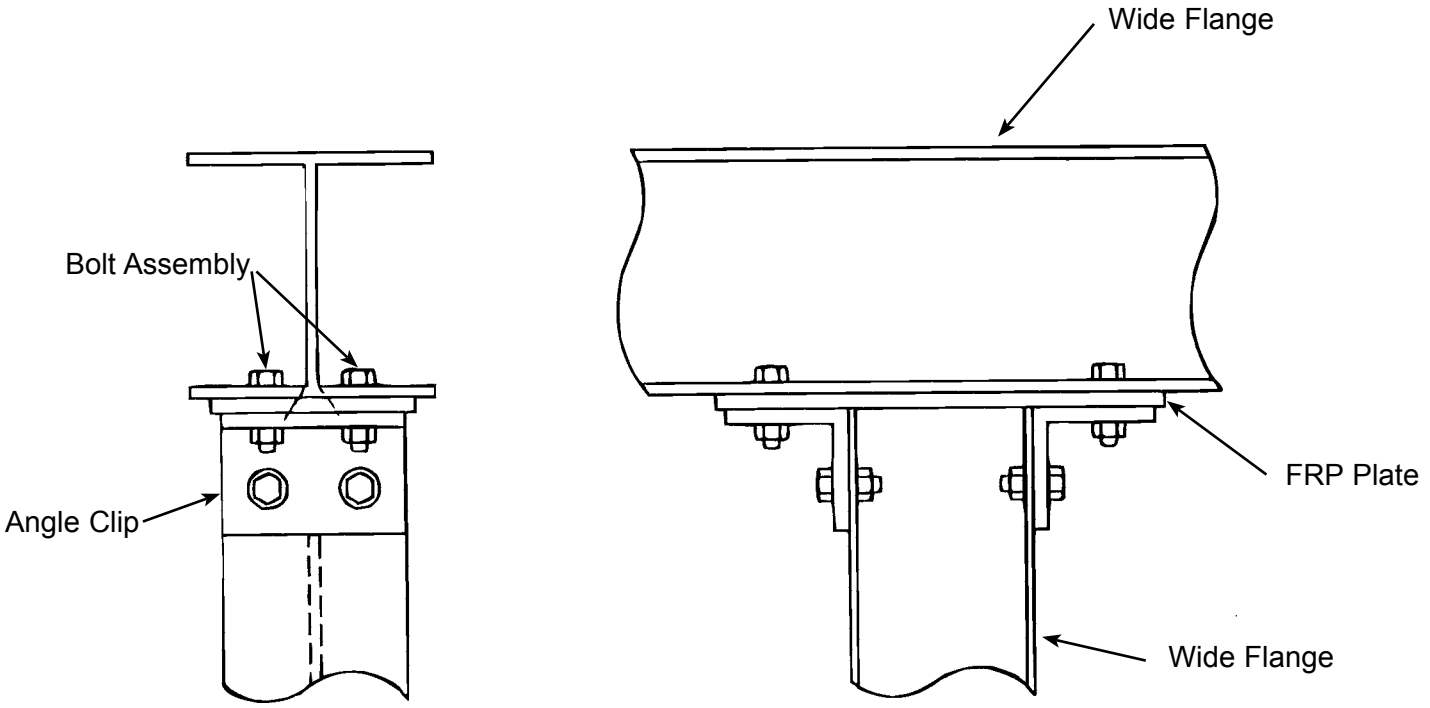

DRAWING R: WIDE FLANGE TO CHANNEL CONNECTION

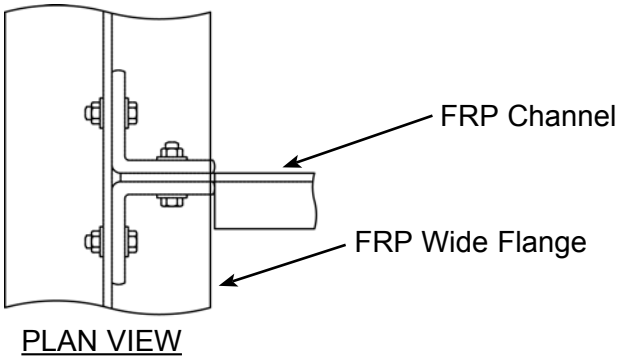

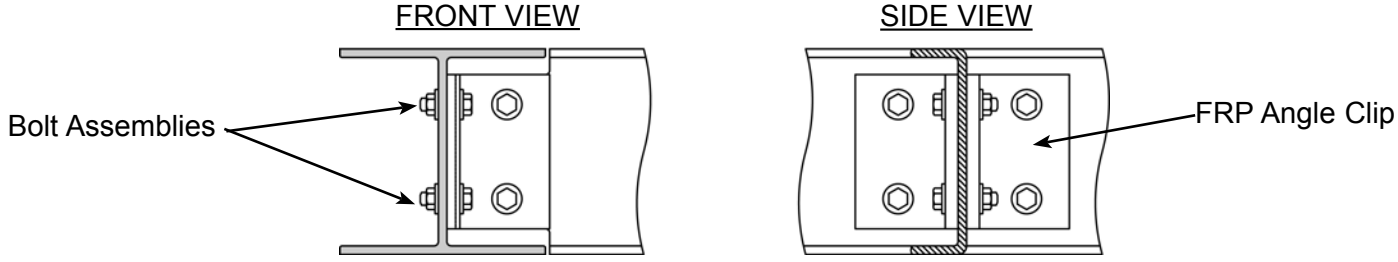

DRAWING S: WIDE FLANGE COLUMN BASE

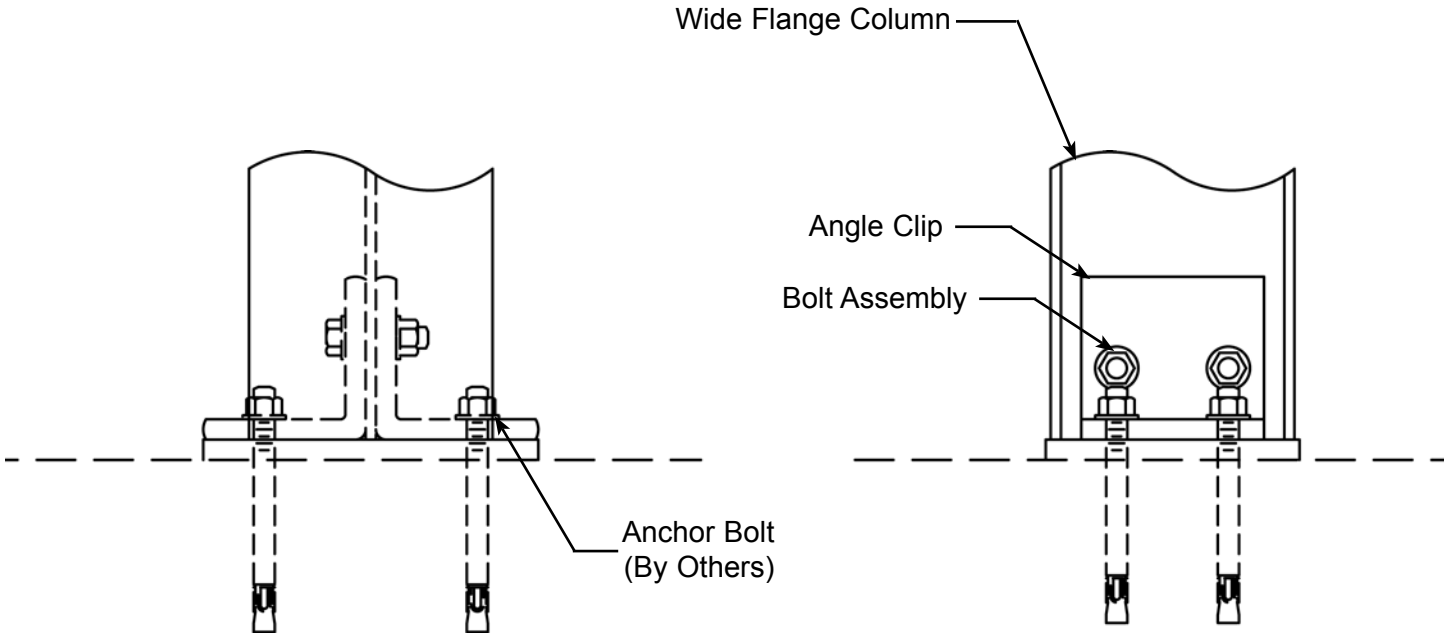

DRAWING T: BOTTOM STAIR STRINGER MOUNT

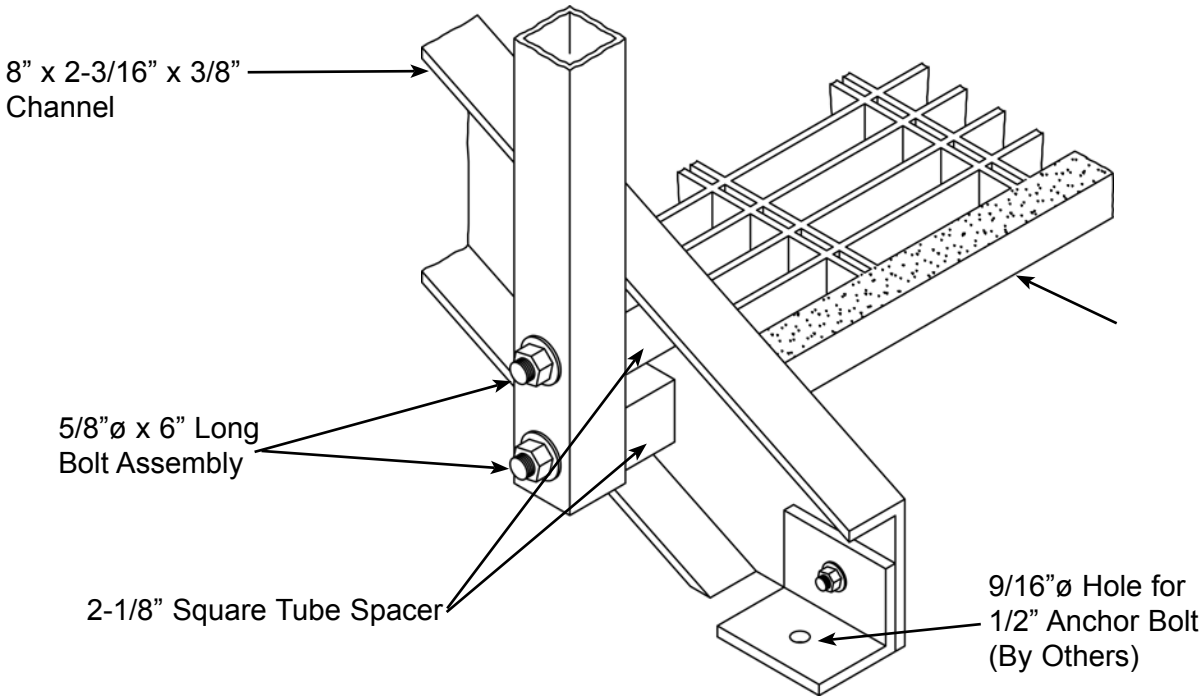

DRAWING U: TOP STAIR STRINGER MOUNT

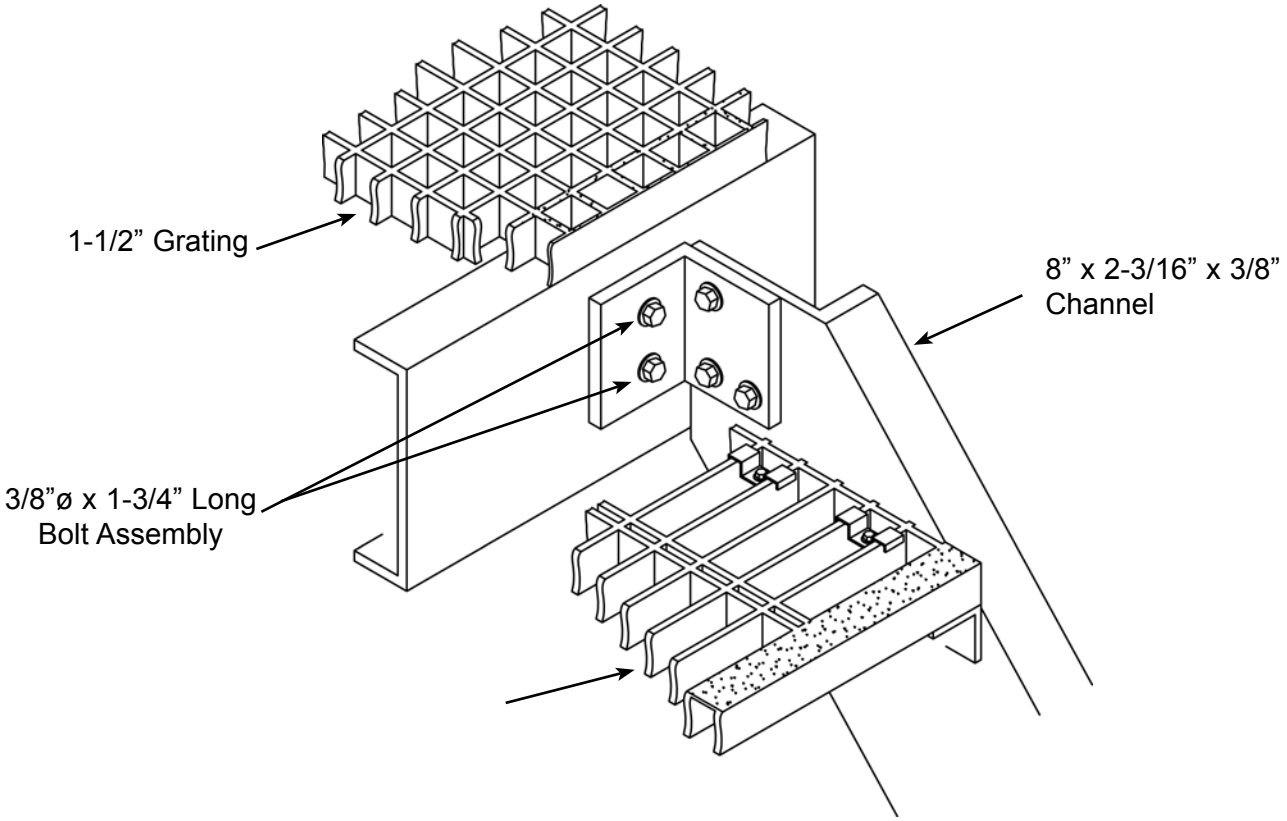

ZeAllgrate

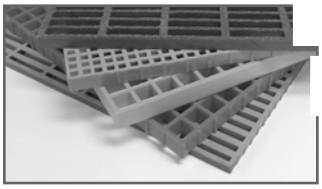

resins and more than twenty grating configurations available in many panel sizes and surfaces.



unidirectional strength for industrial and pedestrian pultruded grating applications.

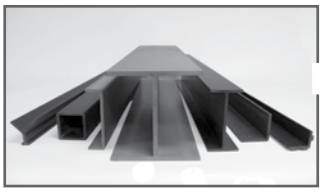

and commercial use, including I-beams, wide flange beams, round and square tubes, bars, rods, channels, leg angles and plate.



Easily assembled from durable components or engineered and prefabricated to your specifications,

systems meet or exceed OSHA and strict building code requirements for safety and design.

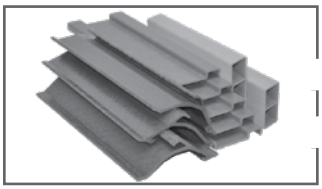

Custom Composite Solutions

custom composite solutions to meet our client's specific requirements. Either through unique



Design & Fabrication Services

provides turnkey design and fabrication of fiberglass structures, including platforms, catwalks, stairways, railings and equipment support structures.



Worldwide Sales & Distribution Network

Whether a customer requires a platform in a mine in South Africa to grating on an oil rig in the North Sea, or walkways in a Wisconsin cheese plant to railing at a water treatment facility in Brazil;

expectations of any customer.

literature and assumes no responsibility for the consequential or incidental damage
in the use of these products and systems described, including any warranty
merchantability or fitness. Information contained here can be for evaluation only. Th
marks and trade names appearing herein, whether registered or unregistered, are th

Printed in the USA