南通泽昊新材料有限公司

Nantong ZeAll New Materials Co., Ltd.

M-clips for molded gratings------Mesh 38x38mm

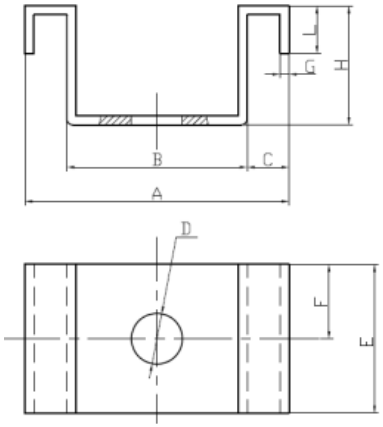

Item	A	B	C	D	E	H	G	L	Surface Type
M13	54	28	13	8.5	25	12	1.5	9	Grit
M1”	54	28	13	8.5	25	22	1.5	10	Grit
M1.5”	54	28	13	8.5	25	37	1.5	10	Grit
M2”	55.5	23	16.25	8.5	20	38	2	9.5	Grit
M13	50	30	10	8.5	25	13	1.5	8	Concave
M1”	50	30	10	8.5	25	22	1.5	9	Concave
M1.5”	50	30	10	8.5	25	37	1.5	9	Concave

M-clips for molded gratings------Mesh 50x50mm

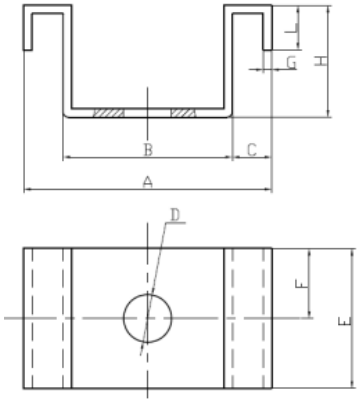

Item	A	B	C	D	E	H	G	L	Surface Type
M15	64	41	11.5	8.5	25	13	1.5	8.5	Grit &Concave
M1”	64	41	11.5	8.5	25	22	1.5	8.5	Grit &Concave
M40	64	41	11.5	8.5	30	35	1.5	8.5	Grit &Concave
M2”	64	41	11.5	8.5	30	44	1.5	8.5	Grit &Concave

NTONG,JIANGSU, China 226012

Tel:+86-513-66819918/Fax:+86-513-95694090

sales@izeall.com

南通泽昊新材料有限公司

Nantong ZeAll New Materials Co., Ltd.

M-clips for molded gratings------Mini-mesh 19x19/38x38mm

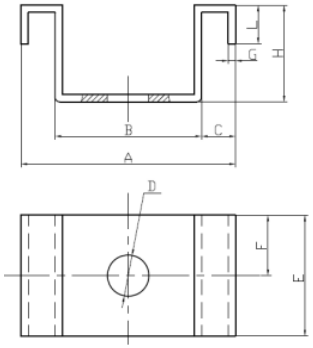

Item	A	B	C	D	E	H	G	L	Surface Type
M3/4”-12	33.5	11.5	11	5.5	11	12	1.5	7.5	Grit &Concave
M3/4”-17	33.5	11.5	11	5.5	11	17	1.5	7.5	Grit &Concave
M3/4”-20	33.5	11.5	11	5.5	11	20	1.5	7.5	Grit &Concave
M3/4”-25	33.5	11.5	11	5.5	11	25	1.5	7.5	Grit &Concave

M-clips for molded gratings------Mini-mesh 20x20/40x40mm

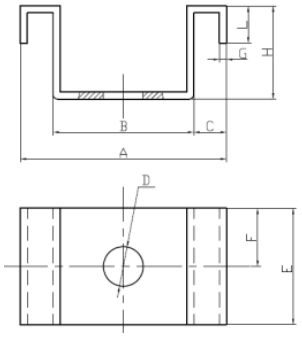

Item	A	B	C	D	E	H	G	L	Surface Type
M20/40-12	36	12.6	11.7	5.5	11.5	12	1.5	7.5	Grit &Concave
M20/40-17	36	12.6	11.7	5.5	11.5	17	1.5	7.5	Grit &Concave
M20/40-20	36	12.6	11.7	5.5	11.5	20	1.5	7.5	Grit &Concave
M20/40-25	36	12.6	11.7	5.5	11.5	25	1.5	7.5	Grit &Concave

NTONG,JIANGSU, China 226012

Tel:+86-513-66819918/Fax:+86-513-95694090

sales@izeall.com

南通泽昊新材料有限公司

Nantong ZeAll New Materials Co., Ltd.

C-clips for molded gratings

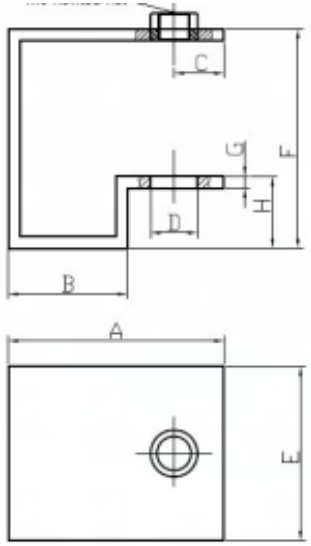

Item	A	B	C	D	E	F	G	H	Surface Type
C-25	35	20.5	8.5	7	25	30.5	1.5	6.5	Grit
C-30	35	20.5	8.5	7	25	35	1.5	7.5	Grit
C-38	36	20.5	9.5	7	25	42.5	1.5	9	Grit
C-40	38	22	9.5	7	25	45	1.5	9	Grit
C-50	40	23.5	9.5	7	25	54	1.5	9	Grit
C-25	35	18	9.25	7	25	31	1.5	6.5	Concave
C-30	35	18	8.25	7	25	36	1.5	6.5	Concave
C-38	36	18.5	9.5	7	25	43.5	1.5	7.5	Concave
C-40	38	18.5	9.5	7	25	45	1.5	7.5	Concave
C-50	41	22	9.5	7	25	55.5	1.5	7.5	Concave

L-clips for molded gratings

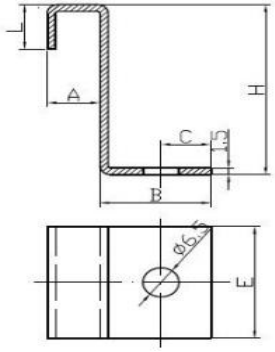

Item	A	B	C	D	E	H	G	L	Surface Type
L-25	12.5	20	10	6.5	25	24.5	1.5	9.5	Grit
L-38	12.5	20	10	6.5	25	37.5	1.5	9.5	Grit
L-50	12.5	20	10	6.5	25	49.5	1.5	9.5	Grit
L-25	10	20	10	6.5	25	25	1.5	9.5	Concave
L-38	10	20	10	6.5	25	37	1.5	9.5	Concave
L-50	10	20	10	6.5	25	49	1.5	9.5	Concave

NTONG,JIANGSU, China 226012

Tel:+86-513-66819918/Fax:+86-513-95694090

sales@izeall.com

南通泽昊新材料有限公司

Nantong ZeAll New Materials Co., Ltd.

Item			
J-38	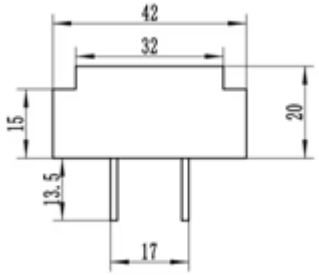	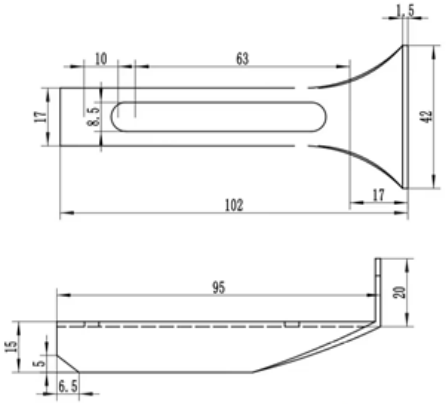	
J-50	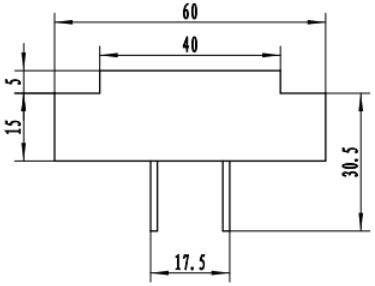	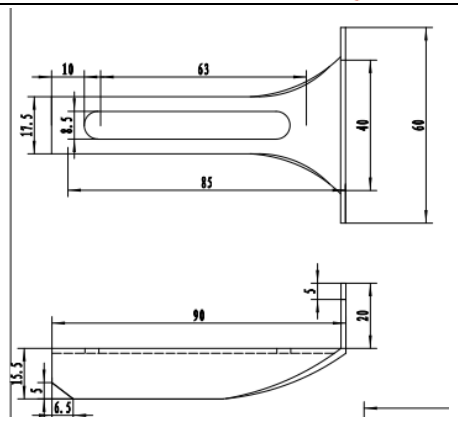	

NTONG,JIANGSU, China 226012

Tel:+86-513-66819918/Fax:+86-513-95694090

sales@izeall.com

南通泽昊新材料有限公司

Nantong ZeAll New Materials Co., Ltd.

J-minimesh	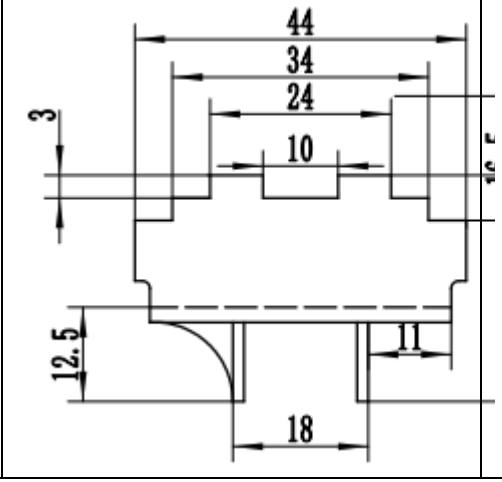	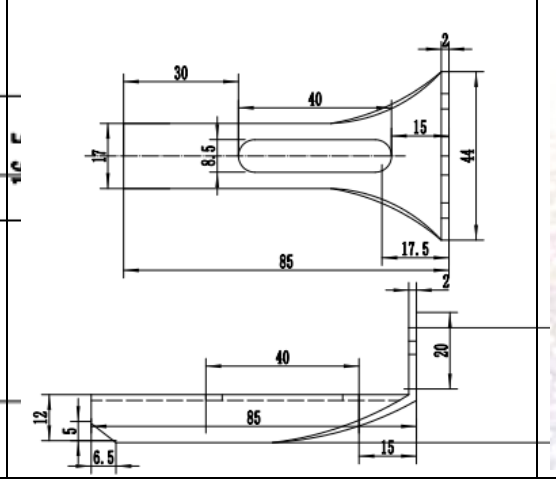	

Round-Top Clips

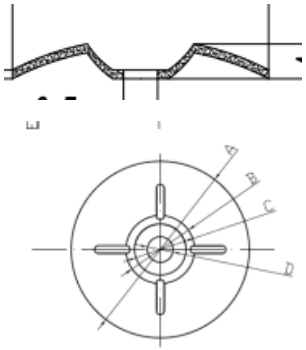

Item	Dia		Hole size	
Dia30	30		8.5-6.5	
Dia40	40		8.5-6.5	
Dia45	45		8.5-6.5	
Dia45-2	45		6.5	

NTONG,JIANGSU, China 226012

Tel:+86-513-66819918/Fax:+86-513-95694090

sales@izeall.com

Other Round –top Clips

Item	Dia		Hole size			
Dia55	55		8.5-6.5			
Dia53	53		8.5			
Dia52	52		8.5			
Dia52	52		8.5			

NTONG,JIANGSU, China 226012

Tel:+86-513-66819918/Fax:+86-513-95694090

sales@izeall.com

南通泽昊新材料有限公司

Nantong ZeAll New Materials Co., Ltd.

Item		
Handle-A	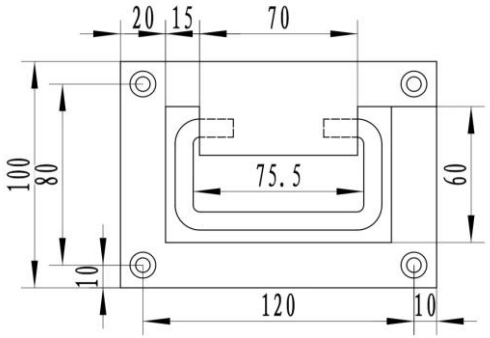	
Handle-B	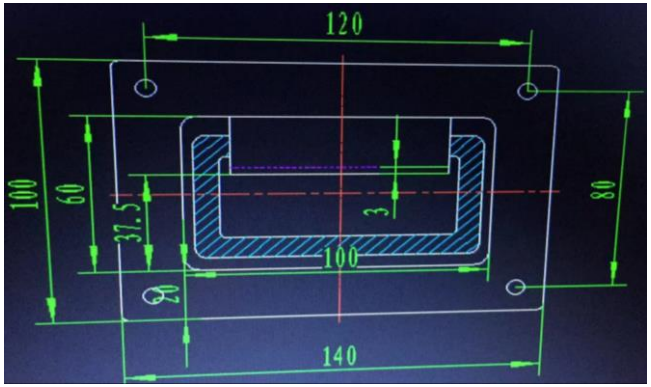	

NTONG,JIANGSU, China 226012

Tel:+86-513-66819918/Fax:+86-513-95694090

sales@izeall.com