ZEALLGRATE®

FRP Grating Installation Manual

Molded & Pultruded Grating

Fabrication · Installation · Safety · Tools · Maintenance

Stair Treads · Handrail & Ladder Systems · Clips & Accessories

Nantong ZeAll New Materials Co., Ltd.

sales@izeall.com · +86-513-6681-9918 · www.izeall.com

ISO 9001:2015 Certified · Exporting to 45+ Countries

Contents

1. Introduction & Scope
2. Receiving, Handling & Storage
3. Recommended Safety Practices
4. Tools Required
5. Fabrication — Guide to Cutting, Drilling & Sealing
6. Installation — Support & Fastening
7. Panel Installation Procedures
8. Stair Tread Installation
9. Handrail & Guardrail Installation
10. Ladder Installation
11. Maintenance, Inspection & Repair
12. Field Repairs
13. Contact & Technical Support

1. Introduction & Scope

This manual provides the fabricator, installer, engineer and maintenance personnel with the practical procedures and safety requirements for handling, cutting, installing and maintaining ZeAllgrate® fiber-reinforced plastic (FRP) grating and related composite products. Read this manual in full before beginning any fabrication or installation work.

FRP grating is manufactured from corrosion-resistant resin systems reinforced with continuous or compression-molded glass-fiber rovings. It combines high strength-to-weight ratio, corrosion resistance, low maintenance and electrical non-conductivity, making it an ideal alternative to steel, aluminum and wood in aggressive industrial environments.

1.1 Products covered by this manual

This manual covers the complete ZeAllgrate product range, including:

- • ZeAllgrate Molded Grating — compression-molded square-mesh grating in a range of meshes, depths and surface finishes (grit-top, flat-top, concave-top, fine-mesh).
- • ZeAllgrate Pultruded Grating — pultruded I-bar grating (industrial and pedestrian series) and high-load-capacity grating.
- • Stair Treads, Floor Plate and Covered Grating.
- • Structural Shapes (angles, channels, I-beams, wide-flange).
- • Handrail, Guardrail and Ladder Systems.
- • Clips & Accessories (hold-down clips, tie plates, edge banding, sealing kits).

1.2 General notes and responsibility

Product performance depends on correct selection, proper fabrication and sound installation. The information in this manual is provided for evaluation and guidance only. Load ratings are based on standard laboratory tests; verify all load and span requirements against the current ZeAllgrate load tables for the specific panel, resin system and support conditions used. If a condition is not covered here, contact ZeAll technical support before proceeding.

Note: Sawing, grinding and machining of FRP produces dust. Always follow the safety practices in Section 3.

1.3 How to use this manual

Review the full manual before fabrication and installation. Section 2 covers receiving and storage; Section 3 the mandatory safety practices; Section 4 the tools needed; Section 5 the fabrication methods; Sections 6–10 the installation procedures for grating, stair treads, handrails and ladders; Section 11 maintenance; Section 12 field repairs; and Section 13 technical support and warranty. Keep this manual available at the work site for reference.

1.4 Typical applications

ZeAllgrate FRP grating and systems are used in corrosion-prone and safety-critical applications, including: chemical and petrochemical plants; wastewater and water treatment facilities; food, beverage and pharmaceutical processing; pulp and paper mills; marine and offshore platforms; power generation; pulp and paper bleach plants; architectural access platforms and pedestrian walkways; and structural mezzanines and platforms.

2. Receiving, Handling & Storage

2.1 Receiving inspection

Inspect every shipment immediately upon receipt. FRP grating can be damaged by rough handling during transport. Check for cracked or chipped bars, delamination of grit surfaces, warped or twisted panels, and broken edges. Report any damage or shortage to the carrier and to ZeAll within the time allowed by the delivery terms before accepting the material.

2.1.1 Receiving inspection checklist

Use the following checklist when receiving a shipment to confirm the material is acceptable:

Inspection item	Acceptable condition

Panel flatness	No permanent bow, twist or warp beyond specification
Bar condition	No cracks, chips or broken bearing bars
Grit / anti-slip surface	Intact, no delamination or large bare areas
Edges / corners	No broken or crushed edges
Resin surface	No blisters, crazing or soft spots
Quantity / marking	Matches packing list and labels

2.2 Handling

FRP grating is lighter than steel but must be handled with care to avoid damage:

- • Always wear gloves when handling FRP products to protect hands from sharp cut edges and glass-fiber dust.
- • Lift panels by the edges or with a spreader bar; never drag panels across concrete, steel or other abrasive surfaces.
- • Use two or more people (or mechanical lifting equipment) for large or heavy panels; never drop panels from height.
- • Do not stand on, walk over or place heavy loads on stacked, unsupported panels.

2.3 Storage

Store grating panels flat on level, uniformly spaced supports (stack height limited to prevent deformation). Keep panels clean, dry and protected from direct, prolonged sunlight to avoid surface yellowing and fiber bloom. Store away from weld spatter, flame and solvent. Keep adhesive-label side up where applicable and avoid stacking heavy items on top of grating.

Store grating panels flat on level, uniformly spaced supports (stack height limited to prevent deformation). Keep panels clean, dry and protected from direct, prolonged sunlight to avoid surface yellowing and fiber bloom. Store away from weld spatter, flame and solvent. Keep adhesive-label side up where applicable and avoid stacking heavy items on top of grating.

2.4 Storage condition summary

Condition	Recommendation
Surface	Level, clean, uniformly spaced supports
Stacking	Limit height; supports aligned under bearing bars
Exposure	Keep out of prolonged direct sunlight
Contamination	Keep away from solvents, weld spatter, flame, oil
Cover	Cover with breathable sheeting for long-term outdoor storage
Handling on site	Re-position with slings or spreader bar; avoid dragging

2.5 Temperature considerations

FRP expands and contracts with temperature more than steel. Leave adequate clearance at panel ends and around perimeter obstructions to accommodate thermal movement, and allow for this when sizing and cutting panels in applications subject to significant temperature swings.

3. Recommended Safety Practices

Prior to cutting, drilling, grinding or installing ZeAllgrate products, take the following steps:

1. 1. Carefully read the Safety Data Sheet (SDS / MSDS) for the product and resin system. If you do not have an SDS, contact ZeAll before fabricating. Individuals with respiratory ailments should not fabricate FRP products.
2. 2. Observe common safety precautions when using cutting tools. Always wear gloves when handling FRP products. Wear approved safety glasses or goggles to protect the eyes, and a respirator (mask) to reduce inhalation of dust. A NIOSH/MSHA approved mask for dust with a permissible exposure limit (PEL) of not less than 0.1 mg/m³ is

recommended.

3. 3. Dust from cutting FRP products can cause skin irritation. Wear clothing that reduces dust contact with the skin. If cutting causes difficulty breathing or excessive skin irritation, stop immediately and consult a physician.
4. 4. Observe common safety precautions when using the sealing kit. Read and follow the instructions enclosed in the kit prior to use. Always wear safety glasses and protective clothing when working with FRP products or a sealing kit. Do not allow resin or catalyst to come into contact with skin.
5. 5. Provide adequate ventilation in enclosed cutting areas. Use dust extraction where available to minimize airborne dust.
6. 6. Follow all applicable local, state and federal workplace safety regulations, including machine guarding and lockout/tagout where required.

3.1 Personal protective equipment (PPE) summary

PPE	When required
Gloves	Always when handling or cutting FRP
Safety glasses / goggles	Always when cutting, grinding or drilling
Respirator (dust mask)	During all cutting, sanding and grinding; NIOSH/MSHA approved
Protective clothing	To reduce dust contact with skin during fabrication
Hearing protection	When using power saws and sanding equipment

Note: These practices are a minimum requirement. Assess the specific hazards of the work site and add controls as needed.

4. Tools Required

4.1 Recommended tools

Fabrication of FRP grating requires the same types of tools used for wood and soft metals. The following tools are recommended for a professional, clean result:

Tool	Recommended specification
Power saw	Masonry or carbide-grit blade; rotary saw for straight cuts, jig saw for circular cuts; diamond-grit blade
Sawhorses / platform	To support panels securely while cutting
Measuring tools	Tape measure, straight-edge, chalk-line or felt-tip pen for marking cuts
Sanding	Sandpaper to smooth cut edges; power sanding wheel gives best results (#20 fine, #16 fast)
Sealing kit	ZeAllgrate FRP edge-sealing kit to seal cut and sanded surfaces
Drill	Hand drill or press with carbide-tipped bits for fastener and clip holes
Fastening tools	Torque wrench for bolted connections; clip installation tooling as supplied
Lifting equipment	Spreader bar, slings or crane for large panels as required

4.2 Tool maintenance

Replace dull blades and worn sanding discs promptly. Dull tooling causes heat buildup, resin smearing, frayed edges and excessive dust, which reduces both the quality and speed of fabrication.

5. Fabrication — Guide to Cutting, Drilling & Sealing

5.1 Fabrication tips

A major advantage of ZeAllgrate molded and pultruded products is ease of fabrication — sawing, grinding, drilling and machining is similar to working with wood, metals and plastics. If possible, perform fabrication “on-site” to increase accuracy. Be sure to allow for saw kerf (usually 3/16″) when performing take-offs and layouts. For a neat, professional

installation, cut panels so the bars of adjoining panels are aligned, and leave a solid bar on all sides of each panel.

5.2 Layout and marking

Transfer the dimensions from the field or drawings directly onto the panel. Mark cut lines with a felt-tip pen, chalk-line or straight-edge. Verify all dimensions twice before cutting; FRP cannot be welded and any incorrect cut must be trimmed and re-sealed.

5.3 Cutting

Support the panel securely so it will not flex or shift during cutting. Use a rotary saw for long straight cuts and a jig saw for circular or curved cuts (for example around pipes and stanchions). For grit-top panels, cut from the smooth side (bottom) to avoid damaging the grit surface. Use even, steady pressure; excessive pressure causes heat and ragged edges.

5.4 Drilling and notching

Use carbide-tipped drill bits at moderate speed to drill clean fastener and clip holes. Avoid climbing in at panel edges. Notch corners and cut-outs for columns, pipes and handrail posts with a jig saw; leave adequate support around openings and re-seal all exposed cut edges.

5.5 Edge finishing and sealing

Sand all cut edges to remove fuzz and burrs. Open-grit sandpaper on a high-speed sanding wheel provides the best results: use #20 sandpaper for fine sanding and #16 for fast sanding. Use light, even pressure to prevent wavy, uneven surfaces. Then coat all cut or sanded surfaces with the ZeAllgrate sealing kit to prevent corrosive chemicals from reaching exposed glass fibers. Carefully read and follow the instructions included with the sealing kit.

5.6 Fabrication procedures

1. Support the panel securely so it will not flex or shift during cutting.
2. Mark cuts clearly and carefully. Avoid splitting 1/4″ and 5/16″ bars; molded construction allows “stubs” to support weight.
3. Cut from the smooth side (bottom) of a grit-top panel.
4. Use even, steady pressure when cutting. Excessive pressure may cause heat and/or ragged edges. Replace dull blades to prevent heat buildup.
5. Sand all cut edges with open-grit sandpaper on a high-speed sanding wheel (#20 fine, #16 fast) using light, even pressure.
6. Use a sealing kit to coat all cut or sanded surfaces to prevent corrosive chemicals from reaching exposed glass fibers. Read and follow the instructions included with the kit.



Figure 5-1 Power saw with carbide-grit blade

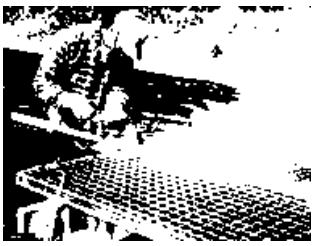

Figure 5-2 Support platform / sawhorse



Figure 5-3 Sealing kit

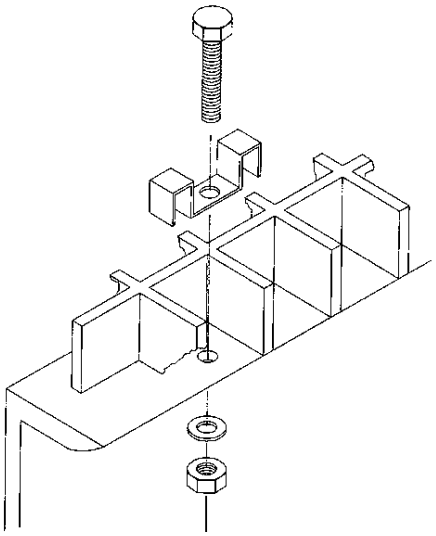

Figure 5-4 Saddle-type hold-down clip (M-Clip) assembly

5.7 Common fabrication problems and remedies

Problem	Cause	Remedy
Ragged or frayed cut edge	Dull blade; excessive pressure	Replace blade; use even, steady pressure
Heat buildup / resin smearing	Dull blade; high speed	Use sharp carbide/diamond blade; reduce feed speed
Split 1/4″ or 5/16″ bars	Cutting across thin bars unsupported	Support panel firmly; cut along bars where possible
Fuzzy, rough surface after sanding	Wrong grit; heavy pressure	Use #16/#20 paper; light even pressure
Wavy edge after sanding	Heavy, uneven sanding pressure	Use light pressure and a flat backing block
Delamination at cut edge	Impact or heat during cutting	Cut with sharp blade; seal exposed edges promptly

6. Installation — Support & Fastening

6.1 Support requirements

Provide a minimum of 1-1/2″ bearing support around all edges of every grating panel. Intermediate supports must be spaced according to the current ZeAllgrate load/span tables for the selected panel and resin system, and for the applied load. Ensure all supports are level, in plane and aligned so that the grating bears uniformly and does not rock.

Parameter	Requirement
Minimum edge bearing	1-1/2″ (38 mm) on all edges
Support centers	Per load/span table for panel & resin selected
Support surface	Level, in-plane, full-width bearing
End bearing of pultruded bars	Continuous across all bearing bars
Gaps between panels	Keep uniform; align bars of adjoining panels

6.2 Fastening overview

All FRP grating must be positively held down to prevent uplift, vibration and movement. Use ZeAllgrate hold-down clips (saddle-type M-Clip, G-Clip or MI-60 clip assemblies) or stainless steel bolted connections, depending on the application, load and environment.

6.3 Clip spacing

Use saddle-type hold-down clips spaced a maximum of every 48″, with a minimum of four clips per panel for molded grating. Additional clips are recommended at every bearing bar where the application involves vibration, uplift or heavy traffic. Verify spacing against the project specification.

Grating type	Hold-down method	Max spacing	Minimum per panel
Molded grating	M-Clip / G-Clip saddle	48″ (1220 mm)	4 clips
Pultruded grating	G-Clip / MI-60 clip	36–48″ (per spec)	2 per bearing bar end
High-load grating	Bolted w/ washers	Per engineered design	At every support

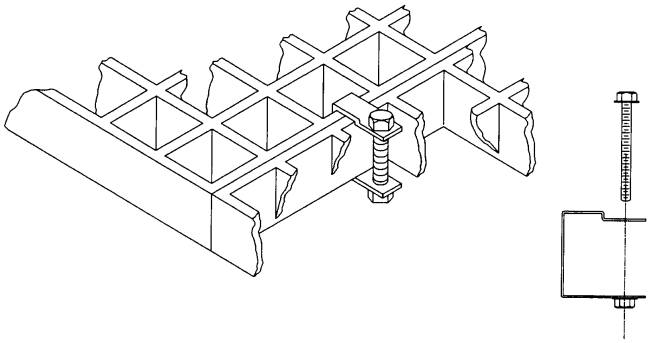

Figure 6-1 F-clip assembly securing grating to support

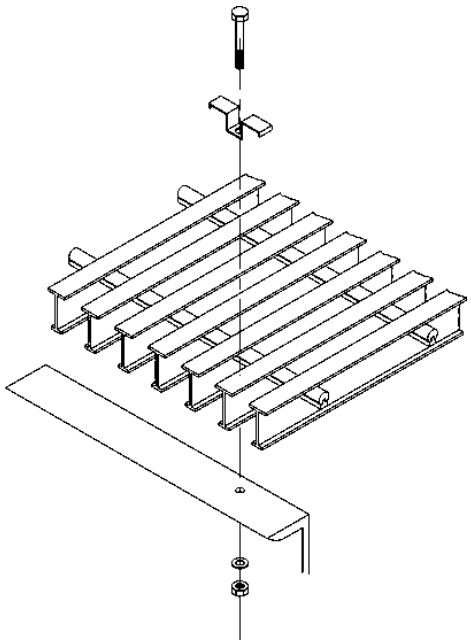

Figure 6-2 MI-60 clip assembly

6.4 Bolted connections

Where bolted connections are specified, use stainless steel bolts, washers and nuts with a backing plate or large flat washers to distribute the load and prevent localized crushing of the FRP. Do not over-torque; tighten evenly to the specified value. Use anti-seize compound on stainless fasteners in corrosive environments.

6.5 Support structure considerations

Support the grating on structural steel, FRP structural shapes, concrete or other materials that will not corrode or degrade in the service environment. Where steel supports are used in corrosive areas, specify coated or galvanized steel. Ensure support flanges are wide enough to provide full bearing and that all support surfaces are in a common plane so panels bear evenly.

6.6 Uplift and vibration resistance

In wind-exposed, vibrating or traffic areas, add extra hold-down clips at every bearing bar and confirm the fastening pattern against the engineered design. Panels subject to uplift must be secured at both ends and along intermediate supports.

7. Panel Installation Procedures

Follow these steps for a clean, level and secure installation of grating panels:

1. Provide a minimum of 1-1/2″ support around all edges; set panels level and in plane.
2. Cut panels to fit using the procedures in Section 5; align bars of adjoining panels and leave a solid bar on all sides.
3. Sand and seal all cut edges before installation.
4. Set each panel onto the supports, orienting grit-top surface upward where specified.
5. Install hold-down clips spaced a maximum of every 48″, with a minimum of four clips per panel; seat clips so the panel is firmly held without over-tightening.
6. Check that all panels bear uniformly, do not rock, and that gaps between panels are uniform.
7. Trim and seal any interference cuts around stanchions, pipes and columns.
8. Final-inspect the installed area: all edges sealed, all panels secured, all clips installed.

Note: For covered grating, the solid top skin must face upward and the open-mesh underside provides the bearing. Take care not to cut through the solid skin where surface continuity is required.

8. Stair Tread Installation

ZeAllgrate stair treads are factory-assembled pultruded or molded treads supplied with anti-slip grit or a slip-resistant surface, and are installed as a complete unit or as panels cut to stair width.

8.1 Installation steps

1. Verify tread width and depth against the stair stringer layout.
2. Support the tread across the full width of the stringers; provide end bearing of at least 1-1/2″.
3. Where treads require trimming, cut, sand and seal all exposed edges.
4. Install the tread with the anti-slip surface uppermost, firmly seated on the stringers.
5. Fasten the tread using the supplied clips or stainless screws into the stringer support, holding the tread without crushing the FRP.
6. Where tread nosings are fitted, align them to project uniformly over the stair edge.
7. Inspect each tread for uniform support and secure fixing before allowing foot traffic.

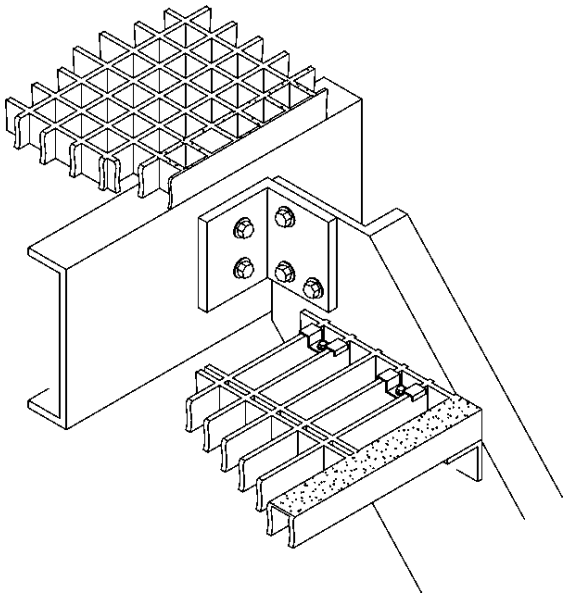

Figure 8-1 Stair tread and stringer-mount connection detail

8.2 Stair tread data (verify against product data sheet)

Parameter	Typical value
Tread width (standard)	9″–12″ (229–305 mm)
Tread depth	Per stair run and stringer spacing
Surface	Grit-top or slip-resistant pultruded surface
Bearing	Full width on stringers; min 1-1/2″ end bearing
Fastening	Supplied clips or stainless screws into stringer support
Nosing	Factory or field-applied; project uniformly over stair edge

9. Handrail & Guardrail Installation

ZeAllgrate handrail and guardrail systems are supplied as pre-engineered post, rail and connection components. Install them so that the completed system provides the required height, load capacity and fall protection for the application.

9.1 Component checklist

Component	Function
Posts	Vertical support; spaced per design (typical max 5′ centers)
Top rail	Handrail/guardrail at required finished height
Mid rail / kick plate	Intermediate protection / toe board
Base plates / stanchion bases	Connect post to structure or grating
Connectors & fittings	Rail-to-post and rail-to-structure connections

9.2 Installation steps

1. Set out and mark post locations per the design drawing.
2. Mount base plates or stanchion bases to the supporting structure using stainless steel anchors; grout or shim level where required.
3. Set posts plumb and secure them to the base plates.
4. Install the top rail at the specified finished height, securing it to the posts with the supplied connectors.
5. Install intermediate mid rail or kick plate at the design height.
6. Verify all connections are tight, rails are level, and the completed system meets the specified height and load requirements.
7. Seal any field-cut edges of the FRP components.

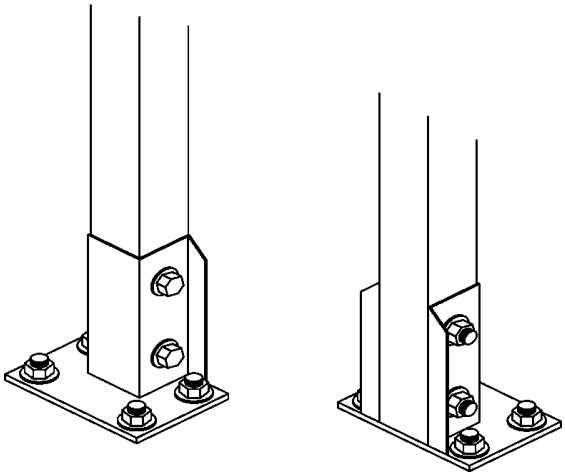

Figure 9-1 Guardrail post connection (stanchion base)

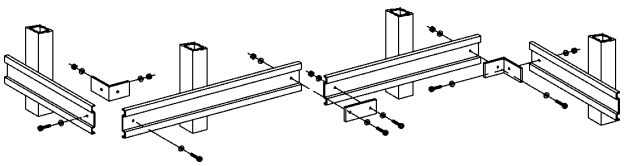

Figure 9-2 Post-to-structure guardrail connection

Note: Where a handrail post passes through a grating panel, cut a clearance hole (Section 5), seal the edges, and secure the panel around the post with clips.

9.3 Typical guardrail dimensions (verify against project spec)

Parameter	Typical value
Post spacing	5′ (1524 mm) maximum on centers
Top rail height (walking surface to top of rail)	42″ (1067 mm) typical
Mid rail height	21″ (533 mm) typical; or kick plate 4″–6″
Post size	Per load requirement; standard FRP square or round post
Connection	Stainless steel base plates, grouted or anchored to structure

10. Ladder Installation

ZeAllgrate FRP ladders are installed as pre-engineered units. Proper alignment of rungs, secure connection to the structure and adequate clearances are essential for safe service.

10.1 Installation steps

1. Position the ladder against the supporting structure at the required angle and set-back.
2. Secure the top of the ladder to the structure with the supplied wall-mount kit or angle brackets at the rungs/stringers.
3. Secure the bottom of the ladder to a firm footing or floor structure.
4. Where a safety cage is specified, assemble and secure the cage rings and vertical straps at the design spacing.
5. Verify all fasteners are tight, the ladder is plumb in both planes, and rung spacing is uniform.
6. Seal any field-cut or drilled edges.

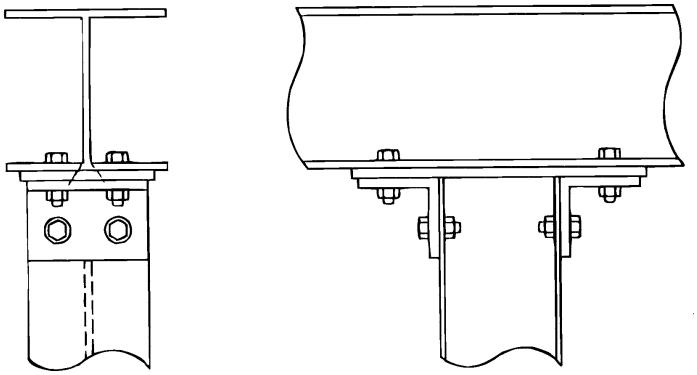

Figure 10-1 Post-to-structure column connection detail

Note: Verify the required set-back, rung spacing and cage dimensions against the applicable code and the project specification before installation.

10.2 Ladder data (verify against product data sheet)

Parameter	Typical value
Rung spacing	Uniform, per applicable code (typical 12″ centers)
Ladder width	Per product data sheet
Set-back (rung to structure)	Per code and safety-cage configuration
Safety cage	Where required; rings and straps at design spacing
Fixings	Stainless wall-mount kits / angle brackets at rungs and stringers
Finish	Field-cut and drilled edges sealed with sealing kit

11. Maintenance, Inspection & Repair

11.1 Routine inspection

Inspect installed FRP grating periodically — at least annually, and more often in corrosive or high-traffic environments. Look for loose or missing clips, damaged bars, delaminated grit surfaces, cracking, chemical attack (softening, discoloration, blistering) and corrosion of steel supports beneath the grating.

11.2 Cleaning

Clean grating with water, mild detergent and a soft brush or pressure washer at moderate pressure. Do not use aggressive solvents that may soften the resin system. Keep grit surfaces free of oil, grease and slippery deposits to preserve slip resistance.

11.3 Fastener and clip re-torque

Re-torque bolted connections and verify clip seating during each inspection cycle, especially after the first weeks of service when thermal cycling and vibration may loosen fasteners.

11.4 UV and surface protection

Prolonged outdoor exposure causes surface yellowing and fiber bloom. Where appearance matters, apply a UV-stable gel-coat or paint system compatible with the resin as recommended by ZeAll.

11.4.1 Inspection schedule

Inspection level	Frequency	Typical checks
Visual / walk-down	Annually (min)	Loose clips, damage, delamination, chemical attack, support corrosion
Detailed	Every 2–3 years	Bar integrity, grit condition, fastener torque, load-bearing capacity
Post-event	After storms, spills or impacts	Uplift, cracked bars, disturbed panels; re-secure as needed

11.5 Minor repairs

Minor damage such as chipped bars or worn grit can be repaired by trimming the affected area, sanding smooth and recoating with the sealing kit. For significant damage, replace the affected panel following the procedures in Sections 5 and 7.

12. Field Repairs

12.1 Panel replacement

1. Identify and mark the damaged area; remove the affected panel by cutting fasteners/clips and lifting the panel clear.
2. Cut a replacement panel to the correct size following Section 5; sand and seal all cut edges.
3. Set the replacement panel level and in-plane on the supports.
4. Reinstall hold-down clips at the correct spacing and re-torque any bolted connections.
5. Seal the cut joints between the new and existing panels.
6. Inspect the repaired area before returning it to service.

12.2 Localized repair

For localized damage (for example a single broken bar or a worn anti-slip surface), trim the damaged section, sand smooth, seal the exposed edges, and where required apply a fresh layer of anti-slip grit coating per the sealing kit instructions.

13. Contact & Technical Support

For technical questions, load information, fabrication guidance or field support, contact the ZeAll technical and sales team.

Item	Detail
Company	Nantong ZeAll New Materials Co., Ltd.

Website	www.izeall.com
Email	sales@izeall.com
Phone	+86-513-6681-9918
Certification	ISO 9001:2015; material certificates and load-test reports supplied with every shipment
Service	Technical support available within 30 minutes on business days

How to request technical support

When contacting ZeAll for fabrication or installation support, please provide the following information so that we can respond quickly and accurately: the product type and panel size (e.g. molded 1″ x 1″, pultruded I-beam); the resin system; the application and environment (chemical exposure, temperature, load); the support spacing; and a description of the issue or question. Our technical and sales team will respond within 30 minutes on business days.

Warranty & Disclaimer

ZeAll believes the information contained in this manual to be true and accurate, but makes no warranty, expressed or implied, based on this literature and assumes no responsibility for consequential or incidental damages in the use of the products and systems described, including any warranty of merchantability or fitness. Information contained herein is for evaluation and guidance only. Always verify load ratings, support spacing and installation details against the current ZeAllgrate technical documentation and the project specification.

14. Glossary of Terms

Common terms used in this manual and in FRP grating specifications:

Term	Definition
FRP (GRP)	Fiber-reinforced plastic (glass-reinforced plastic); a composite of resin and glass fiber
Bearing bar	A load-carrying bar of the grating that spans between supports
Mesh	The grid pattern of a molded grating defined by bar spacing and depth
Grit-top	An anti-slip surface of embedded silica/aluminum-oxide grit on the walking surface
Pultrusion	A continuous process for manufacturing constant cross-section composite shapes
Saw kerf	The width of the material removed by a saw blade during cutting
Hold-down clip	A saddle-type fastener that secures the grating to the support
Span	The clear distance between supports over which the grating bears
Delamination	Separation of the grit layer or resin from the reinforcement
Fiber bloom	Exposure of glass fibers at the surface due to weathering or wear
Sealing kit	A resin-based kit used to seal cut FRP edges against chemical attack
NIOSH/MSHA	US agencies whose approved respirators provide recognized dust protection

For terms not listed here, or for product-specific questions, contact ZeAll technical support for clarification before proceeding with fabrication or installation.

Related ZeAllgrate documentation

The following documents provide complementary technical information and should be referenced together with this manual:

- • ZeAllgrate Product Catalog — product range, sizes and standard options.
- • ZeAllgrate Resin Selection Guide — resin systems and corrosion resistance.
- • ZeAllgrate Chemical Resistance Guide — chemical compatibility ratings.
- • ZeAllgrate Load & Span Tables — load ratings and maximum spans.
- • ZeAllgrate Molded & Pultruded Data Sheets — panel dimensions and properties.
- • ZeAllgrate Fastening System Manual — clip and connection details.

Download these documents from the ZeAll resources library at www.izeall.com.

For fabrication, installation or maintenance questions, contact the ZeAll technical support team by phone at +86-513-6681-9918 or by email at sales@izeall.com. Our engineers will assist you within 30 minutes on business days.

Limited Warranty

ZeAllgrate products are warranted to be free from defects in materials and workmanship under normal service, as set out in the ZeAll sales terms and conditions. Because field conditions and service environments vary, the purchaser should verify product suitability for the intended application. ZeAll is not liable for damage or failure resulting from misuse, improper fabrication, or failure to follow these installation instructions.